TERRACE & GARDEN

Technology 2026

Excerpt from price list

moveIT

Product configuration tool

Advantages

- Easiest employee training due to intuitive product selection
- Saves time and money
- Reduction of product training through selection options and the saving of default settings
- Graphic support during configuration
- Printed price lists are no longer required
- Products and prices are always up to date
- Ongoing review of products for feasibility thanks to comprehensive integrated checks; in this way products that are not technically feasible are excluded
- Orders are immediately forwarded to HELLA digitally, meaning the completion of forms is no longer necessary and thus no transmission errors can occur and manual input is not required
- Tailor-made interfaces with industrial systems
- Data exchange via XML OpenTrans possible

Configuration of HELLA products

- Powerful product configuration tool for sun protection products
- All HELLA products are available in the system
- Secure and guided recording of product data for offers and orders
- List price and purchase conditions are stored, so that the correct customer-specific stored purchase price and thus the margin for our customer is immediately visible at any time
- A professional offer is immediately available at the click of a button and can be forwarded to the customer

Available systems

moveIT@ISS+

- Advanced possibilities for dealers of sun protection products with their own customer management system
- Management of own articles
- Digital ordering directly from HELLA
- Customer can view products offline

moveIT@EASY

- Web-based solution for small dealers of sun protection products
- Straightforward preparation of offers and digital ordering directly from HELLA
- No software installation

HELLA configuration tool – Integration into industry software solutions such as 3E-LOOK and SBH-Factu

- Increased efficiency: Through seamless integration, our sun protection products can be configured directly in the software used. This saves time, as users do not have to switch between different systems.
- Fewer errors: As the configuration and ordering processes take place within one system, the risk of errors due to manual data entry or duplicate processes is minimised.
- Ordering directly from HELLA: After configuration, the products can be ordered immediately, which speeds up the ordering process considerably and ensures faster delivery.

General **5**
General information 6
Wind resistance 8
Standard colors 14
Infrared radiant heater 20
Covers **25**
Cover 26
Awnings 28
Valance 30
Balcony bordering 31
Over-glass/under-glass awnings, Pergola awning 32
SINTESI 33
TERRA SIDE 34
VENTUR SIDE 35
Things to know about the cover 36
Cover types 39
Awnings **43**
Type overview 44
Folding arm awning – AREIA 6030 50
Folding arm awning – AREIA 7040 56
Folding arm awning – VIVA 7040 64
Cassette awning – PAN 7040 72
Cassette awning – CLEO 5530 80
Cassette awning – CLEO 7030 86
Cassette awning – CLEO 7040 94
Cassette awning – C2 104
Varioplus roller blind (VP) 112
Wind and sight screens 114
Over-glass awnings **119**
Type overview 120
Over-glass awning SOLEYA / SOLEYA protect 122
Under-glass awnings **129**
Type overview 130
SOLANYA protect under-glass awning 132
Under-glass awning SOLEYA / SOLEYA protect 138
Pergola awnings **147**
Type overview 148
Pergola awning ELEGANZA / ELEGANZA protect 150
Pergolas **173**

SINTESI 176
SINTESI FREE 194
SINTESI / SINTESI FREE 200
TERRA SIDE 220
Slat roofs 225
VENTUR ONE 226
VENTUR SIDE 268
VENTUR GLASS 274
LED lighting 282
Installation technique 291
Installation surfaces 292
Installation sets 294
Control devices Accessories 309
Radio system HELLA ONYX SMART HOME 310
Radio system io – Somfy 312
Wired control components – Somfy 318
Awnings 320
SINTESI 321
VENTUR ONE 325

General information

General

The products in this document are customised. Returns, changes or exchanges are not possible. Subject to technical modifications. Color deviations between plastic parts and coated surfaces depend on the material or manufacturing process and cannot be ruled out; the same applies for spare part reorders in anodized colors.

The drive side of an awning is specified from the outside.

Notes on production tolerances

HELLA products are custom-made. Returns, changes or exchanges are not possible. Subject to technical modifications.

Please note that despite millimetre-precise production, tolerances can be found on the finished product. These tolerances refer to the cutting dimensions and not to the finished dimensions of the curtains.

Ordering dimension [mm]	Tolerance [mm]
≤2000	±1.5
≤4000	±2
≤5000	±3
≤6000	±5

Note on awning as rain protection

An awning offers only limited rain protection.

The inclination of the awning in the drawn-out position must be at least 14° to prevent water pockets when it is raining. Even with sufficient inclination, a complete denseness is not guaranteed when it is raining! This shall also apply for all-weather covers.

Note on possible water entry with cassette awnings

The closing behaviour of cassette awnings extremely depends on a strainless installation. In case of cassette awnings with rafter installation, bracket twists may occur due to the motions of the rafters, which results in a worse closing behaviour. Consequently, a possible water entry can not be excluded and is no reason for complaint.

In case of cassette awnings, which are installed with a lower angle of inclination than the minimum angle of inclination, soiling of the sealing profiles on the cassette or standing water on the front rail can cause water to penetrate if the roof above (terrace floor) is watered directly or during heavy rainfall. Consequently, possible water entry cannot be ruled out and is no reason for complaint.

Notes on cloths

- For acrylic, acrylic Lumera and polyester, the designs according to the current HELLA awning collection are valid.
- Transverse seams (seal keder) at the roller tube and the front rail are always sewn.
- The All weather is only available with sewn side seams.*
- UltraSeam version only available for acrylic, acrylic Lumera, polyester and RECYCLED POLYESTER.

* not with CLEO 5530/7030

Assessment of the product features

Our textile blinds are state-of-the-art, therefore the following guidelines of IVRSA (Industrievereinigung Rollladen-Sonnenschutz-Automation e.V. [Industrial association for roller shutters-sun protection-automation registered association]):

- Guidelines for the evaluation of product features of awnings
- Guidelines for the evaluation of ready-made awning covers
- Guideline - wind loads for the construction of closures and awnings in the retracted condition
- Guideline for cleaning and maintaining awning covers
- Guideline for technical consultation, for the sale and the installation of articulated arm awnings

See homepage **https://ivrsa.de/downloads/richtlinien/**



(Source: IVRSA)

Wind resistance

Wind resistance classes and operating classes according to EN 13659

Obligatory application since 01.04.2006

Since 01/04/2006 the outer ends must carry a CE marking pursuant to EN 13659. The following criteria must be observed!

The Federal Association for Roller Shutter & Sun Protection Devices has elaborated the ift guideline that specifies, what wind resistance class is required for which case of application. This guideline "Application recommendation for exterior blinds and shutters" subdivides the federal territory in wind load zones (1) and terrain categories (2). As a result of this zoning, the relevant wind load zone and terrain category can be determined easily via the location of the building. The installation height (3) of the exterior blinds and shutters specifies the third necessary parameter.

1. Determining the wind load zones

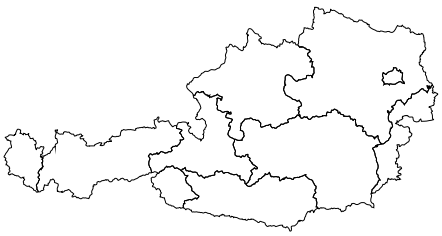

Wind load zones in Austria

In Austria a calculation of the wind load according to the ÖNORM EN 1991-1-4, ÖNORM B 1991-1-4 must be carried out for each location!

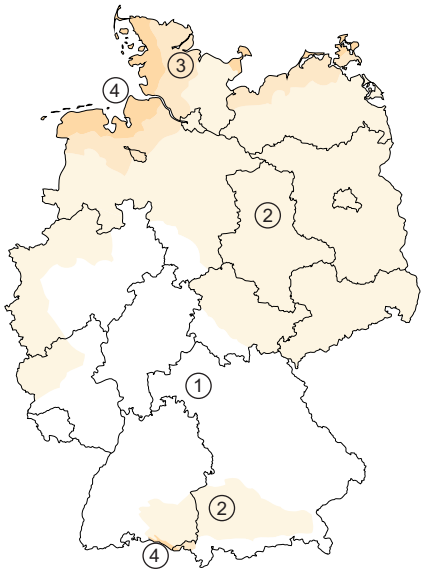

Wind load zones in Germany

- Wind load zone 1 with 22.5 m/s
- Wind load zone 2 with 25.0 m/s
- Wind load zone 3 with 27.5 m/s
- Wind load zone 4 with 30.0 m/s

Source: DIN 1055-4:2005-3, DIN EN 1991-1-4/NA

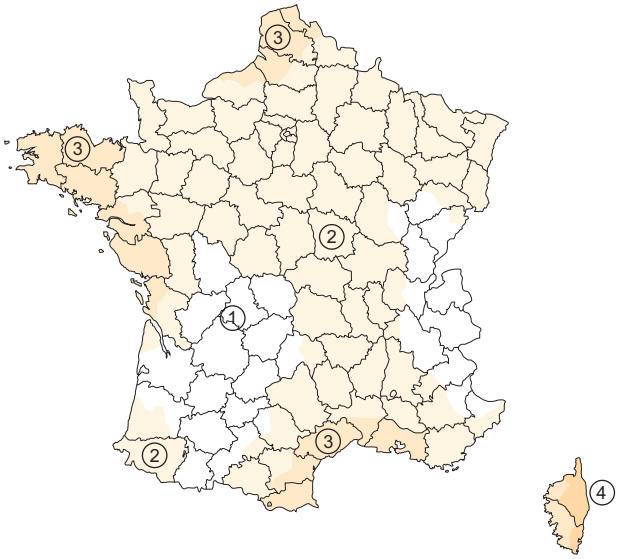

Wind load zones in France

- Wind load zone 1 with 22.0 m/s
- Wind load zone 2 with 24.0 m/s
- Wind load zone 3 with 26.0 m/s
- Wind load zone 4 with 28.0 m/s

Source: Choix des classes de résistance au vent des fermetures (DTU 34.2, NF EN 1991-4/NA)

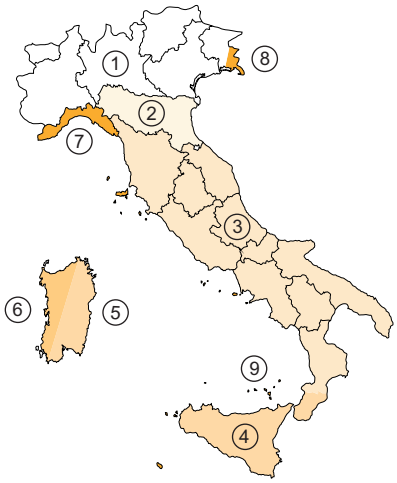

Wind load zones in Italy

Zone	Description	$V_{b,0}$ [m/s]	a_0 [m]
①	Aosta Valley, Piedmont, Lombardy, Trentino-Alto Adige, Veneto, Friuli (with the exception of Trieste)	25	1000
②	Emilia Romagna	25	750
③	Tuscany, the Marches, Umbria, Latium, the Abruzzi, Molise, Apulia, Campania, Basilicata, Calabria (with the exception of Reggio Calabria)	27	500
④	Sicily and Reggio Calabria	28	500
⑤	East of Sardinia (from Cape Teulada to the isle Maddalena)	28	750
⑥	West of Sardinia (from Cape Teulada to the isle Maddalena)	28	500
⑦	Liguria	28	1000
⑧	Province of Trieste	30	1500
⑨	Isles (with the exception of Sicily and Sardinia) and the open sea	31	500

Source: www.madosoft.it
(CNR-DT 207-2008)

Note:

For regions above 1500 m sea level, specifications regarding the climatic conditions and the location must be made.

$V_{b,0}$ [m/s] Wind speed
a_0 [m] Sea level

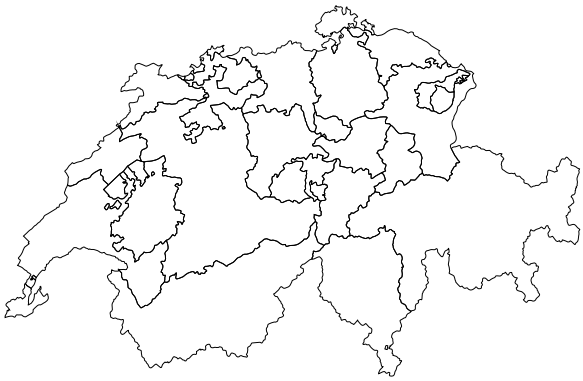

Wind load zones in Switzerland

For Switzerland, the VSR information sheet (Vertical Systems Reseller) regarding the influence of the wind resistance on sun and weather protection systems and the standard SIA 261 stated therein applies.

For other countries the values must be requested separately from the local weather services!

Wind resistance

Wind resistance classes and operating classes according to EN 13659

2. Determining the terrain category

Terrain category I

High seas, lakes with at least 5 km of free space downwind, plain country without obstacles



Terrain category II

Terrain with hedges, several farm buildings, houses or trees, e.g. agricultural area

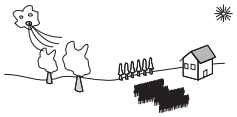

Terrain category III

Suburbs, industrial zones or areas zoned for economic activities, forests



Terrain category IV

Urban areas, whereas buildings with an average height of more than 15 m are built on at least 15% of the area.



Source: DIN 1055-4:2005-3

3. Installation height

The following table of the ift guideline gives the recommended wind resistance class on the basis of the installation height:

Terrain category	Installation height of the exterior blinds and shutters in an average range of 0-8 m				Installation height of the exterior blinds and shutters in an average range of >8-20 m				Installation height of the exterior blinds and shutters in an average range of >20-100 m			
	Wind load zone				Wind load zone				Wind load zone			
	1	2	3	4	1	2	3	4	1	2	3	4
I	3	4	4	4	4	4	5	5	4	5	5	6
II	3	3	4	4	3	4	4	5	4	5	5	5
III	2	3	3	4	3	3	4	4	4	5	5	5
IV	2	3	3	3	3	3	3	4	4	4	4	5

The minimum class regarding the application recommendations is the wind resistance class 2. This does not mean, that products with the classes 0 and 1 may not be applied.

To ensure the highest possible quality standard, a product of the appropriate wind resistance class is to be recommended.

Operating forces

In accordance with EN 13659 our products meet the requirements of the guidelines for maximum allowable operating forces.

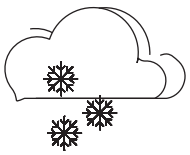

Operability in case of frost

Pergolas and their lateral shading elements are not allowed to be operated in case of freezing. First the units must be freed from snow and ice to make them viable. We do not accept responsibility for damage to the sun protection device, that results from the operation of a frozen unit.

Recommendation: If control devices are used, turn off the automatic control device during winter and check that the unit has been freed from snow and ice before it is operated manually.

Wind Force according to Beaufort (Beaufort Scale)

The English Admiral Sir Francis Beaufort /1774-1857) elaborated the Beaufort scale in 1806.
With the help of this scale it is possible to estimate the wind force on the basis of the effects of the wind. The scale ranges from wind force 0 (still air) to 12 (hurricane).

The positioning and the number of wind warning devices used are decisive for the relevant selection for the wind speed suitable for the object; especially the building geometry and the building location must be considered.

Wind force (degrees acc. to Beaufort)	Description	Average wind speed in a height of 10 m above open country		Dynamic pressure	Effect of the wind in the interior land
		m/s	km/h	[Pa]	
0	still air	**0-0.2**	**<1**	0	Smoke raises vertically
1	slight draught	**0.3-1.5**	**1-5**	0-1	The draught of the smoke shows the wind direction
2	light breeze	**1.6-3.3**	**6-11**	2-6	Wind is noticeable in the face, leaves and vanes are moving
3	gentle breeze, light wind	**3.4-5.4**	**12-19**	7-18	Wind moves thin twigs and stretches pennants
4	moderate breeze, moderate wind	**5.5-7.9**	**20-28**	19-39	Wind moves twigs and thin branches, whirls up dust and loose paper
5	fresh breeze, fresh wind	**8-10.7**	**29-38**	40-72	Smaller deciduous trees start to sway, white crests are formed on lakes
6	strong wind	**10.8-13.8**	**39-49**	73-119	Strong branches sway, it is difficult to hold an umbrella, telegraph cables sough in the wind
7	near gale	**13.9-17.1**	**50-61**	120-183	Resistance felt when walking against the wind, whole trees in motion
8	stormy wind	**17.2-20.7**	**62-74**	184-268	Branches break off from the trees, walking outside is difficult
9	storm	**20.8-24.4**	**75-88**	269-373	Branches break off from trees, houses are damaged slightly (tiles or smoke hatches were lifted from the roof)
10	heavy storm	**24.5-28.4**	**89-102**	374-505	Trees are broken off by the wind, buildings are damaged to a greater extent
11	violent storm	**28.5-32.6**	**103-117**	506-665	Trees are uprooted by the wind, widespread storm damages
12	hurricane	**from 32.7**	**from 118**	666-853	Heavy devastations

Source: ift Rosenheim

Performance classes (wind resistance classes) in relation to resistance to wind loads

Wind resistance classes pursuant to EN 13561:2015-05+AC:2016-03	Dynamic pressure [Pa]
0	<40
1	40
2	70
3	110
4	170
5	270
6	400

Wind resistance

Awnings

The **EN 13561** stipulates wind protection classes and load values for the articulated arm awnings, among others. Since 1st March 2006, it is binding for all manufacturers and retailers of awnings. One consequence of this standard is that, with same-size units but varying mounting base, the type and number of brackets and/or mounting plates can differ.

EN 13561:
All awnings are CE-compliant and comply with wind resistance class 1 in accordance with EN 13561 and Regulation (EU) 2019/1188. The manufacturer's recommendation for use remains unchanged up to wind force 5 (8 - 10.7 m/s), the wind resistance classes according to DIN EN 13561 do not allow any conclusions to be drawn about the suitability for use (retraction/extension, intermediate positions) under actual wind load. The requirements that must be met to fulfil the performance requirements are based on static loads and do not observe the dynamic effects of recurrent occurring loads (turbulences), which the cover and the frame are exposed to in the field. Therefore the static pressure can not be used to specify the fastening of the awnings to the building.

Exceptions and specifications regarding the wind resistance in the installed condition are given in the respective chapters of this price list. When installed, the awning only fulfils the requirements of the given wind protection class according to EN 13561 if:

- the awning is installed with the recommended type and number of brackets,
- the awning is installed under consideration of the given dowel pull-out forces,
- the dowel manufacturer's instructions have been taken into consideration during installation.

Brackets
With folding arm awnings, the mounting brackets for the mounting base concrete (I) for the installation to the wall are included in the basic awning price. If no other information is given in the order, we will supply the number of mounting brackets required for concrete minimum quality C20/C25.
Please note that in any cases the brackets and the fastening devices must correspond to the mounting base, the type and size of awning, the design options (e.g. Varioplus roller blind), the type of installation (wall or ceiling) and the chosen wind resistance class. If in doubt, seek advice from our experts, the sales services or our application technology department. You can also ask your dowel supplier detailed questions about the installation techniques.

Determining the type and number of brackets
The following possibilities are generally available:

1. Calculation based on the price list for wind resistance class 1.
2. You can, of course, obtain information from our sales services and application technology department.

How do I determine the type and number of brackets from the price list?
To make dealing with the new standard as easy as possible for you, we have drawn up a recommended bracket table in the price list, for every type of awning for wind resistance class 1. The following approach:

1. Price calculation for the awning with all equipment options. Please note, that the basic price for the awning always includes the brackets for a mounting base made of concrete minimum quality C20/C25 (installation on the wall).
2. Based on the size of the awning, the design with or without Varioplus roller blind (VP), the installation type on the wall or ceiling and the corresponding mounting base, the type and number of brackets, and the bracket surcharge per awning, can be taken directly from the bracket table.
3. If desired, the appropriate mounting material for the particular mounting base can be ordered at the same time. Please see chapter "Mounting bases” and “Installation techniques".

Installation on wood
In the bracket table of the price list, we differentiate between the 5 most important mounting bases. It should be noted that when installing on wood, based on the variance of this building material, no wind resistance class can be specified. The recommended number and type of brackets for installation on wood is always given below the respective bracket table. However, this does not take into account the quality of the wood and the load-bearing capacity of the wooden sub-structure.

Installation on thermal insulation composite system or clinker facade
With installation on a thermal insulation composite system with a solid sub-structure, e.g. hard wood board, almost the same values apply for a push-through installation, as for the corresponding wall or ceiling installation based on the respective installation base. If fastening is planned over a threaded bar (e.g. Fischer Thermax), we recommend determining the brackets using our calculation programme.

Installation on concrete ceiling face
In case of brickwork with a poor load-bearing capacity, it makes sense to install the awning exactly in the ceiling area in order to encounter a solid foundation such as concrete. Here the building situation should be known in detail. The minimum edge distances for the fixation must be observed.

General
Based on the complexity of the interaction of building materials, tools and fastening elements, any expert advice depends on the exact knowledge of the measurements on site. We ask you to understand that our tips and advice can only be as precise as your description of the proportions on site. Although our tips are given to the best of our knowledge, they cannot be held as binding, for that very reason. It is therefore imperative, that the parameters being used as a basic, and also our advice, be checked for correlation with your data and the circumstances on site.

Over-glass/under-glass awnings and pergola awning

HELLA over-glass / under-glass awnings and pergola awnings are CE declared and correspond to DIN EN 13 13561. The following wind resistance classes apply:

- SOLANYA protect - Wind resistance class 3
- SOLEYA - Wind resistance class 2
- SOLEYA protect - Wind resistance class 3
- ELEGANZA - Wind resistance class 2
- ELEGANZA protect - Wind resistance class 3

When installed, the awning only fulfils the requirements of the given wind protection class according to EN 13561 if:

- the awning is installed with the recommended type and number of brackets.
- the awning is installed under consideration of the given dowel pull-out forces.
- the dowel manufacturer's instructions have been taken into consideration during installation.

Please make sure that in any cases the brackets and the mounting material must correspond to the mounting base, the type and size of awning and the chosen wind resistance class. If in doubt, seek advice from our experts, the sales services or our application technology department. You can also ask your dowel supplier detailed questions about the installation techniques.

Pergolas - SIDE systems

HELLA SIDE systems (VENTUR SIDE, TERRA SIDE) are declared CE-compliant and comply with DIN EN 13561.
Wind resistance class 3 is reached.

Standard colors

General

The colors of the brochure “HELLA Color worlds” are available for all extruded profiles.

Notes:

- With anodized units the visible parts made of cast aluminium are powder coated in an anodising look.
- With anodized units there are longer delivery times (delivery time on request or as per order confirmation).
- As described in standard DIN 17611, slight color differences cannot be avoided with anodized parts. These color deviations are attributable to admissible dispersions depending on the material and processing. Under some circumstances this effect may also occur within one order.

Coating quality

We coat the surfaces in facade quality according to the guidelines of the Gütegemeinschaft für Stückgutbeschichtung (= Quality Control Association for the Coating of Building Components; GSB-Premium).
Regarding color shade and brightness our colors may differ from the original colors of the color charts RAL 840-HR and RAL 841-GL due to different production techniques.

Due to weathering, a natural influence on the color and the gloss level will occur within the warranty period, which, because of its very slow and constant process, do not negatively affect the visual appearance and is therefore not a fault of the product.
The compliance with the coating specifications does not ensure the prevention of filiform corrosion at profile and cutting edges, especially in chloride-containing environments like maritime regions or regions near the coast. Especially under the following conditions, filiform corrosion cannot be excluded:

- On the coast or in regions close to the coast, up to approx. 75 kilometres from the coast.
- In special places with aggressive atmospheres (indoor swimming pools, airports, railway stations)
- Near industrial plants with chemical air pollution
- Near exhaust systems or roads with heavy traffic (de-icing salt)

Comparison VSR/NCS/RAL – Colors

Closest RAL color / variations

Color designation	VSR number	NCS-S number	RAL number	Color variation
White	010	NCS-S 0502-B	9003	ΔE = 2.8
Grey	130	NCS-S 3000-N	7038	ΔE = 3.7
Aluminium	140	-	9006	-
Light beige	240	NCS-S 2010-Y30R	-	-
Beige	110	NCS-S 4010-Y50R	-	-
Brown	071	NCS-S 8010-Y50R	8014	ΔE = 2.7
Moss-green	220	NCS-S 7020-B90G	6005	ΔE = 1.0
Azure blue	440	NCS-S 5040-B	5009	ΔE = 3.5
Bronze	780	IPG 5807E77084S30	-	-
Purple red	330	NCS-S 3560-R	3011	ΔE = 2.4
Terracotta	120	NCS-S 3560-Y80R	3013	ΔE = 2.2
Chrome yellow	720	NCS-S 1080-Y20R	1007	ΔE = 2.3
Pure white	901	NCS-S 0502-Y	9010	ΔE = 0.6
Light grey	904	NCS-S 1502-G	7035	ΔE = 1.8
Green-beige	909	-	1000	ΔE = 1.9
Turquoise blue	908	NCS-S 3040-B40G	5018	ΔE = 3.0
Pigeon blue	903	NCS-S 4030-R90B	5014	ΔE = 3.1
Ultramarine blue	906	NCS-S 4350-R74B	5002	accurate

Attention:
RAL colors are no VSR standard colors
Differences in color of ΔE > 0,5 are for most people recognizable as color differences.

Standard colors

Standard colors for powder-coated aluminium parts

Colour designation			Surface quality		
			Silk gloss	matt	matt fine texture
Anthracite grey	RAL 7016		●	●	●
Normal white	RAL 9016		●	●	●
White aluminium	RAL 9006		●	●	●
Grey aluminium	RAL 9007		●	●	●
Sepia brown	RAL 8014		●	●	●
Moss green	RAL 6005		●	●	●
Pearl white	RAL 1013	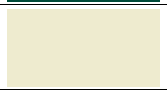	●	●	●
Light grey	RAL 7035		●	●	●
Granite grey	RAL 7012		●	●	●
Slate grey	RAL 7015		●	●	●
Graphite grey	RAL 7024		●	●	●
Grey-brown	RAL 8019		●	●	●
Bronze	VSR 0780		●		
Beige	0003		●		
Dark beige	VSR 0110		●		
Purple red	VSR 0330		●		
Clay brown	RAL 8003		●		
Anthracite iron mica	DB 703			●	●
Marrone 04 Metallic	DM 1000				●
Sparkling Iron Effect	DM 1001				●
Jet black	RAL 9005			●	●

Colour designation			Surface quality		
			Silk gloss	matt	matt fine texture
Colours in anodised look (powder-coated):					
Natural coloured anodised	C0PB			●	
Bronze anodised	C33PB			●	
Dark bronze anodised	C34PB			●	

Selected colors without surcharge in the surface qualities silk gloss, matt and matt fine structure. For awnings and conservatory blinds we recommend the surface qualities matt or matt fine structure.

For pergolas, the silky gloss surface quality is only available for a surcharge. Due to the large surfaces of these units, this gloss level can not be recommended.

Attention:

AREIA 6030 Frame color available in 3 HELLA colors:

- RAL 9006
- RAL 9016
- RAL 7016

Standard colors

Standard colors for VENTUR ONE

There are six different standard color schemes available in which the various components are color-coordinated. The colors of the HELLA Color worlds are of course also available.

Colour scheme	VENTUR SIDE (fabric only)	Frame	Top boards/coverings at top	Slats
	①	②	③	④
Titanium	GS52144	9007MF	9005MF	9016MF
Charcoal	GS52143	9005MF	9005MF	9016MF
Pale white	SA1111	9016MF	9007MF	9016MF
Chestnut brown	GS52143	DM1000MF	9005MF	9016MF
Graphite	SA0109	7024MF	9005MF	9016MF
Natural beige	SA3006	C0PB	9005MF	9016MF
Optional	selectable	selectable	selectable	selectable

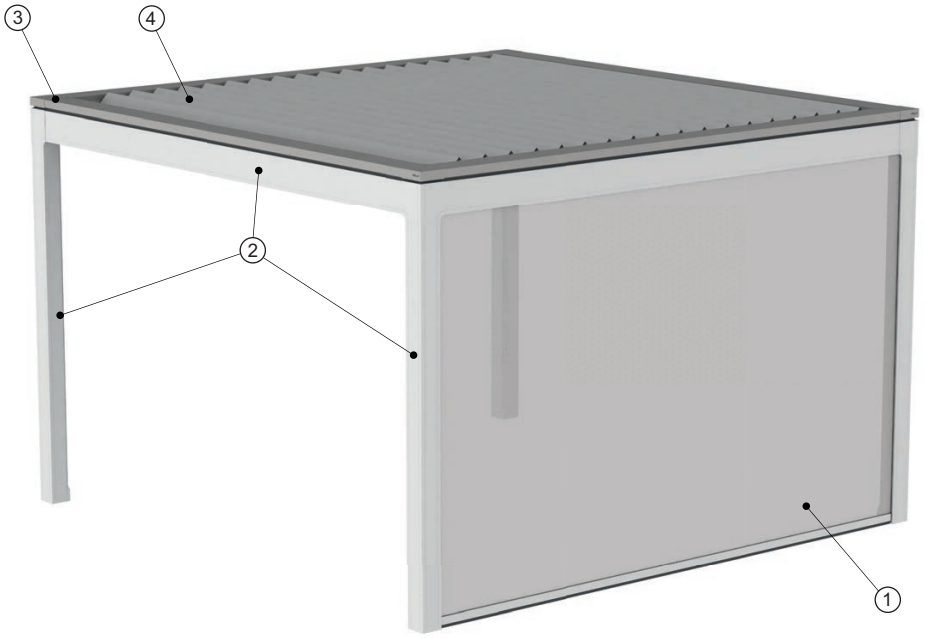

Infrared radiant heater

Wall mounting for awnings, over-glass/under-glass awnings, pergola awnings and pergolas

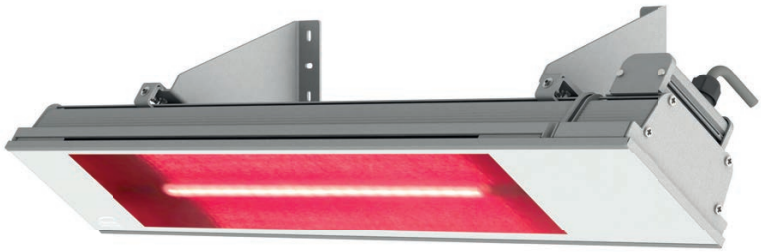

For detailed information on safety instructions and possible installation methods, see the technical section in the chapter "Infrared radiant heaters"

Scope of delivery

Available frame colors:

- RAL 7021M black-grey matt with black glass front
- RAL 9006M white-aluminium matt with white glass front

Supplementary equipment

The radiant heater can be controlled using the Situo 1 Variation io or Situo 5 Variation io hand-held radio transmitter . (not included in the delivery)

Holding devices in the color of the frame or in special color, powder-coated

Benefits of the product

The radiant heater produces short-wave radiant heat (immediate heat) and, on cool evenings, turns the awning into your accustomed oasis of well-being.

Operating voltage: 230V AC, 50 Hz
Capacity: 2200 W
Protection class: IP 65
Control unit: Somfy io
Dimmable in stages: 100 % - 66 % - 33 % - 0 %
Connecting cable: Cable 3x1.5 mm², length 12 m, with open cable ends
Weight: 5.6 kg
Dimensions (BxHxD): 900x170x155 mm (dimensions without holding devices)

Electrical connection:

A protective device (fuse) and separator with 16 A (C16) to disconnect the unit from the mains must be available on site. The device meets the EMC directives for the use in residential and commercial environments.

The electrical installation must take place in accordance with VDE 0100 or the statutory provisions and standards of the respective country and must be performed by an authorised electrically skilled person! Detailed installation instructions are available in the documents enclosed in the delivery.

Attention at awnings, pergola awning:

Due to the high electrical power (2200W), the radiant heater must be connected to a separate power supply line.

Attention at pergolas:

Due to the high electrical performance (2200W) it is not allowed to clamp the radiant heater into the connection box of VENTUR and SINTESI. The radiant heater must be connected to a separate power supply line. The clamping point can be provided in the current-carrying column or behind the box top boards.

The 3-pole cable connector IP68 can be used to connect the electrical supply line.
(Art. no.: 05400209 included in the delivery)

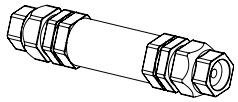

Safety instructions:

- The radiant heater is only allowed to be used outdoors!
- The specified minimum distances as well as the warning notices of the radiant heater must be kept!
- The radiant heater heating may not be operated by a programme selecting switch, a timer switch or another control device, that can switch on the device automatically. There is fire hazard, if the heating is covered.
- The radiant heater may not be used in dusty or explosive environments!
- The radiant heater must be positioned in a height of at least 2100 mm above the floor. The minimum distances to burning materials are 1000 mm towards the front, and 250 mm towards the top and towards the side. Warning - serious fire hazard!
- The radiant heater may not be used, when the retracted awning is provided with a fabric valance or a Varioplus roller blind. Warning - serious fire hazard!
- The radiant heater may only be operated, if the curtain of the SINTESI is completely extended.
- An inclination adjustment of the radiant heater is not possible.
- The holding device is only permitted for an installation to the wall.
- Additional details are available in the documents of the manufacturer.

Liability and warranty:

Due to the high heat development, objects (even awning covers, facades etc.) may be damaged during operation. HELLA assume no liability or warranty.

Duty of supervision:

- The radiant heater must be supervised during operation.
- Children must be supervised during its operation.
- An unintentional switching on via the hand-held radio transmitter must be excluded.

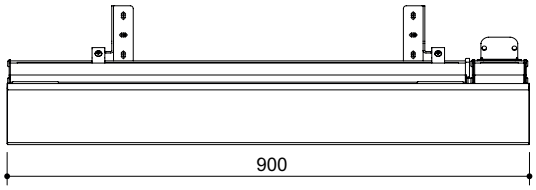

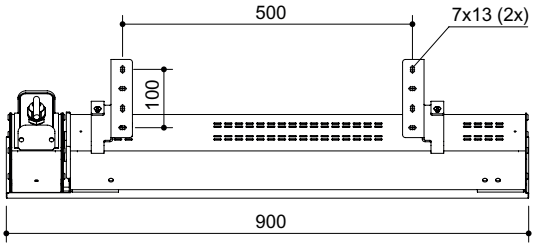

Infrared radiant heater

Types of installation

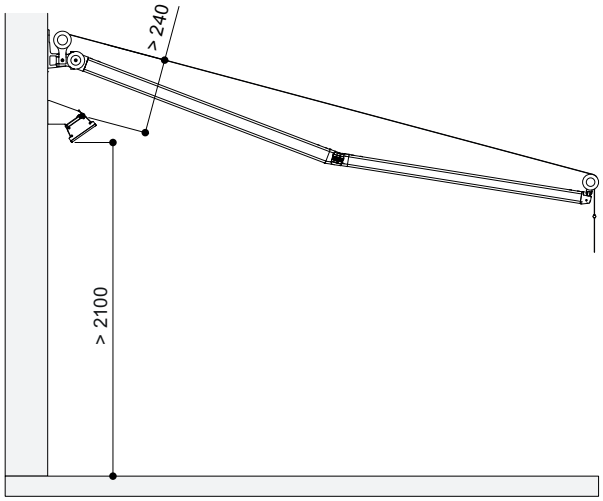

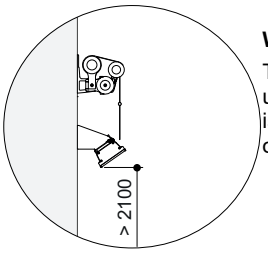

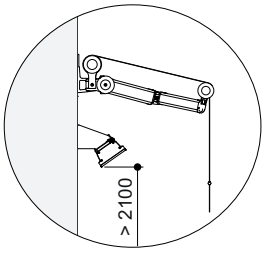

Warning - serious fire hazard!

The radiant heater may not be used, when the retracted awning is provided with a fabric valance or a Varioplus roller blind.

Wall installation with fixed bracket 55°

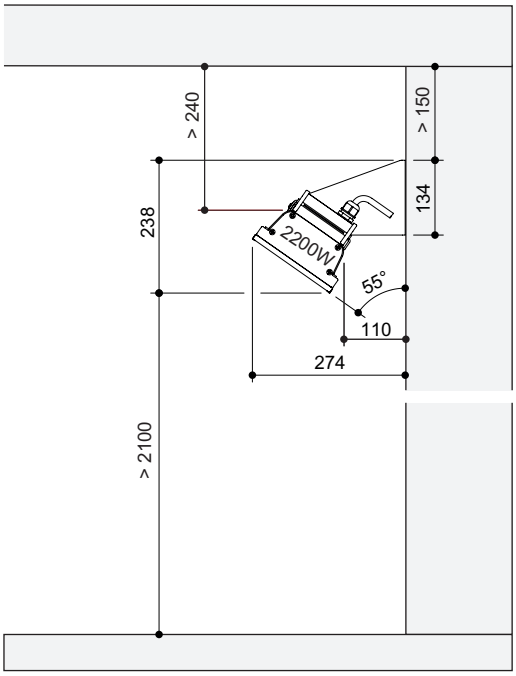

AREIA 6030 / AREIA 7040

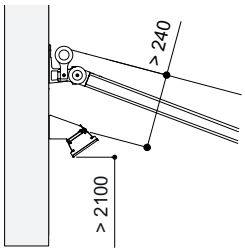

VIVA 7040

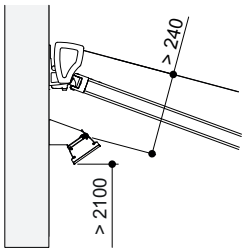

PAN 7040

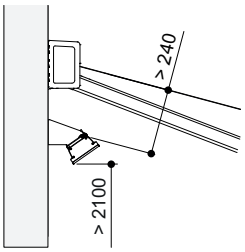

C2

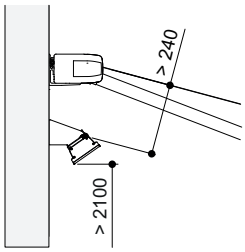

CLEO 5530

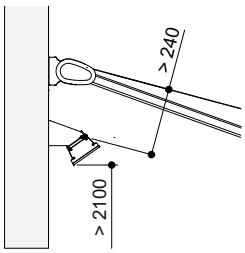

CLEO 7030

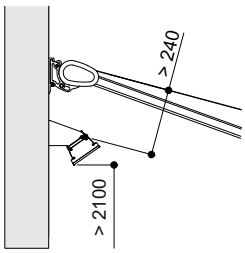

CLEO 7040

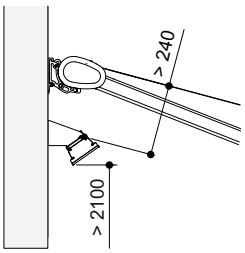

SOLEYA

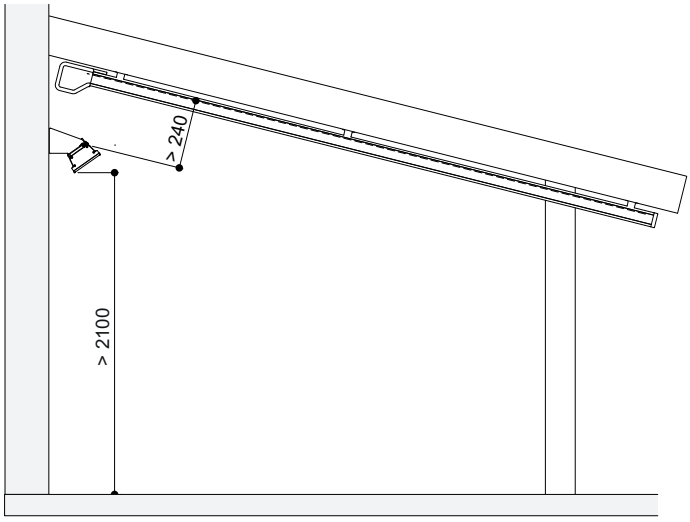

SOLANYA

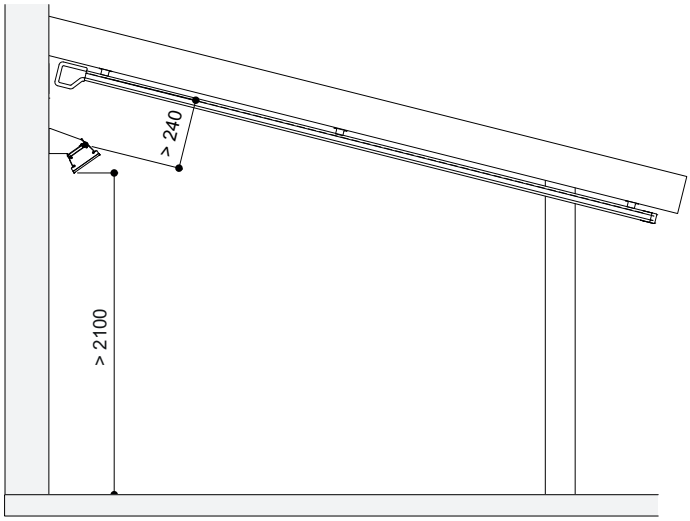

Infrared radiant heater

Types of installation

Installation with SINTESI

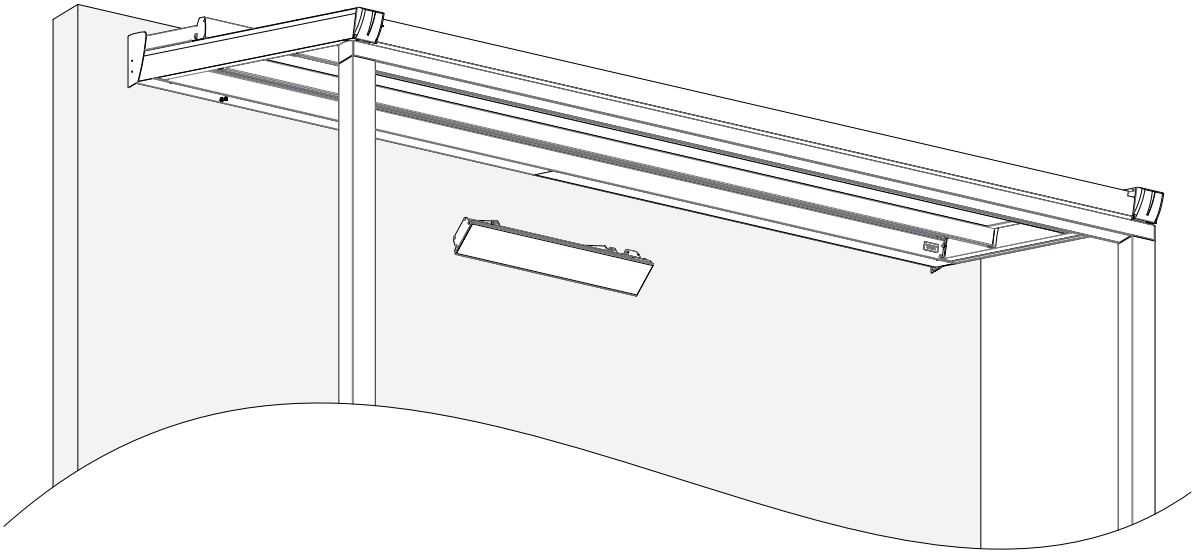

SINTESI with extended curtain

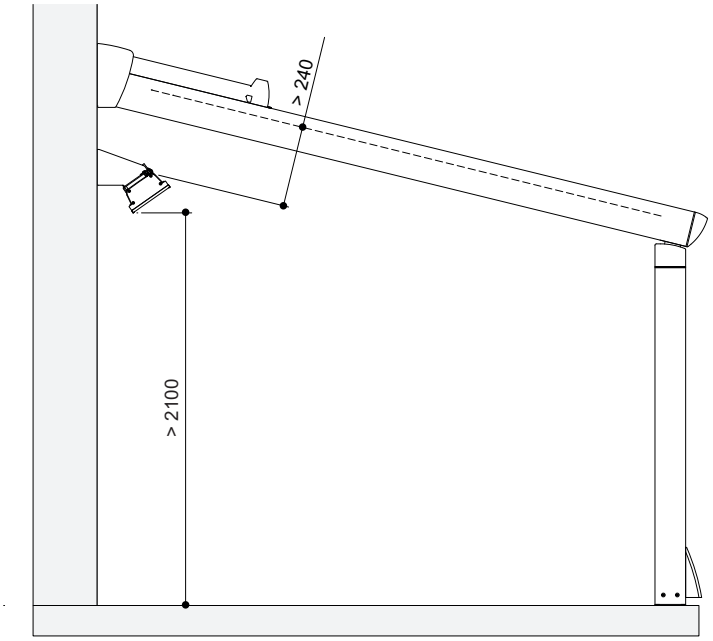

SINTESI with retracted curtain

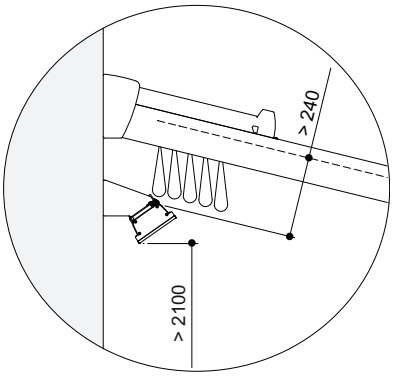

The radiant heater may only be operated, if the curtain of the SINTESI is completely extended! **Warning - serious fire hazard!**

COVERS

Cover



A wide range of cover types is available. The covers are available in different shapes and colors and impress with their attractive design as well as their functionality.

Printing on covers

If covers are to be printed, please request our format template catalogue (or download it from the download area of the HELLA website).

The catalogue shows the data format we require for each use case. Cost-effective printing of your cover is possible only if exactly these data formats are used. If the data are not available in the requested form, or if the data must be processed or if a rework is required, we will invoice this service on an hourly basis.

Note:
Printing on cloths only possible up to max. width 3 m.

Cover types

	Openness coefficient	Awnings	Over-glass/under-glass awnings, ELEGANZA (protect)	SINTESI	TERRA SIDE	VENTUR SIDE
Glass fibre fabric						
G-Screen	5%				●	●
Serge 600	5%				●	●
Serge 1 %	1%				●	●
Classic Satiné 5500	4%				●	●
Classic Natté 4503	3%					●
Polyester- PVC-coated						
Soltis 86 - Color/Alu	14%				●	●
Soltis 86 - Color	14%	●				
Soltis 88 - Color/Alu	8%				●	●
Soltis 92 - Color/Alu	3%				●	●
Soltis 92 - Color	3%	●	●			
Soltis 96 - Color	4%	●	●		●	●
Soltis Veozip - Color	5%				●	●
Polyester fabric - PVC-free						
Starlight (Shiny Polyester)	0%	●	●			●
Starlight blue (recycled polyester)	0%	●	●			
Twilight Pearl 297	3%		●		●	●
324 Firemaster		●				
Acrylic fabric						
Acrylic	0%	●	●			●
Acrylic Lumera	0%	●	●			●
Acrylic All-weather		●*	●			
Twilight Comfort 262	4%		●		●	●
Twilight Elements 214	0%		●		●	●
Waterproof fabric						
OPATEX PRO				●		
Soltis 96 - Proof				●	●	●
Soltis 502 - Proof				●		
Insect screen fabric (protect)						
InsectScreen	45%					●

* not with CLEO 5530/7030

Awnings

Standard assembly

	Roller tube	Front rail also valid for valance	Roller tube		Front rail
			VP roller blind - crank	VP roller blind - Motor	VP roller
AREIA 6030	Keder PVC ø6.0 mm white (Art. no. 14700035)	Keder PVC ø6.0 mm white (Art. no. 14700035)			
AREIA 7040	Keder PVC ø6.0 mm white (Art. no. 14700035)	Keder PVC ø6.0 mm white (Art. no. 14700035)	Keder PVC ø5.0 mm black (Art. no. 14700006)	Clip keder (Art. no. 03470314)	Keder PVC ø5.0 mm black (Art. no. 14700006)
VIVA 7040	Keder PVC ø6.0 mm white (Art. no. 14700035)	Keder PVC ø6.0 mm white (Art. no. 14700035)	Keder PVC ø5.0 mm black (Art. no. 14700006)	Clip keder (Art. no. 03470314)	Keder PVC ø5.0 mm black (Art. no. 14700006)
PAN 7040	Keder PVC ø6.0 mm white (Art. no. 14700035)	Keder PVC ø6.0 mm white (Art. no. 14700035)			
CLEO 5530	Keder PVC ø6.0 mm white (Art. no. 14700035)	Keder PVC ø6.0 mm white (Art. no. 14700035)			
CLEO 7030	Keder PVC ø6.0 mm white (Art. no. 14700035)	Keder PVC ø6.0 mm white (Art. no. 14700035)			
CLEO 7040	Keder PVC ø6.0 mm white (Art. no. 14700035)	Keder PVC ø6.0 mm white (Art. no. 14700035)		Clip keder (Art. no. 03470314)	Keder PVC ø5.0 mm black (Art. no. 14700006)
C2.	Keder PVC ø6.0 mm white (Art. no. 14700035)	Keder PVC ø6.0 mm white (Art. no. 14700035)	Keder PVC ø5.0 mm black (Art. no. 14700006)	Clip keder (Art. no. 03470314)	Keder PVC ø5.0 mm black (Art. no. 14700006)

Cover manufacture

	Type of finishing		Fabric direction			Lateral seam	Cover connection			
			Transverse	Longitudinal			Roller tube	Front rail	Varioplus Motor	Varioplus Crank
			with/without seam	with seam	without seam					
Acrylic fabric	**sewing**	**o**	**-**	**o**	**-**	stitched	Hemstitch*	Hemstitch	Clip keder Varioplus	Hemstitch
	glueing	**+**				glued				
	UltraSeam	**++**				UltraSeam				
	welding	**-**				-				
Acrylic All-weather	**sewing**	**-**	**-**	**o**	**-**	-	Hemstitch*	Hemstitch	Clip keder	Hemstitch
	glueing	**o**				stitched				
	UltraSeam	**-**				-				
	welding	**-**				-				
324 Firemaster	**sewing**	**o**	**-**	**o**	**-**	stitched	Hemstitch	Hemstitch	-	-
	glueing	**-**				-				
	UltraSeam	**-**				-				
	welding	**-**				-				
Polyester fabric - PVC-free	**sewing**	**-**	**-**	**o**	**-**	-	Hemstitch*	Hemstitch	Clip keder	Hemstitch
	glueing	**o**				glued				
	UltraSeam	**-**				UltraSeam				
	welding	**-**				-				
Polyester fabric - PVC coated	**sewing**	**-**	**o**		**-**	**-**	Hemstitch**	Hemstitch	Clip keder	Hemstitch
	glueing	**-**								
	UltraSeam	**-**								
	welding	**o**								

Legend

o	Standard
+	Optional without surcharge
++	optionally available for a surcharge
-	not possible

* A clip keder is used for coupled systems with continuous cover.

** Also available with clip keder (Sunkonfex) at a surcharge.

Limit sizes

Single unit	Acrylic fabric	Acrylic All-weather	324 Firemaster*	Polyester fabric - PVC-free	Polyester fabric - PVC coated*
Maximum width [mm]	7000	7000	7000	7000	4000
Maximum projection [mm]	4000	3500	3000	4000	3500

* The 324 Firemaster and Polyester fabric - PVC coated covers are not compatible with linked units.

Valance

As a standard, the valances are delivered with bordering strips, which are color-coordinated with the respective awning cover (see chapter "Valance borderings"). Our suggestion for the most suitable valance is also in this table. The valance height of the awning VIVA 7040 with design maxima is 220 mm or 290 mm.
Should you desire a different composition, please specify separately.

Valance shape



Valance no. 1 | Valance no. 2 | Valance no. 3 | Valance no. 4 | Valance no. 5

Bordering tapes



No. 79 - Light grey | No. 97 - Dark grey | No. 52 - Beige | No. 16 - Pistachio green

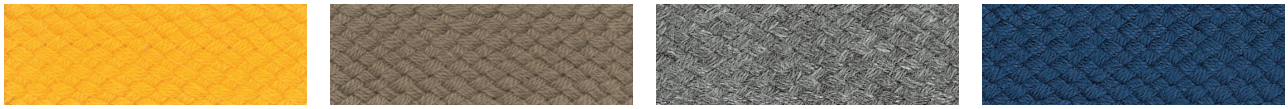

No. 12 - Yellow | No. 926 - Taupe | No. 727 - Grey melange | No. 87 - Blue



No. 15/ 1 - Ecru | No. 15 - White | No. 5 - Dark green | No. 73 - Bordeaux

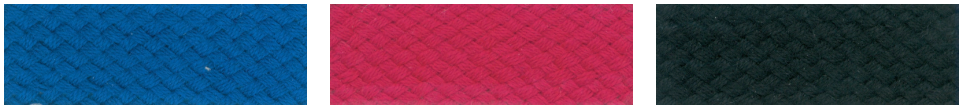

No. 13 - Royal blue | No. 11 - Red | No. 24 - Black

Balcony bordering

Design options:

Sewn version (acrylic and polyester fabric)

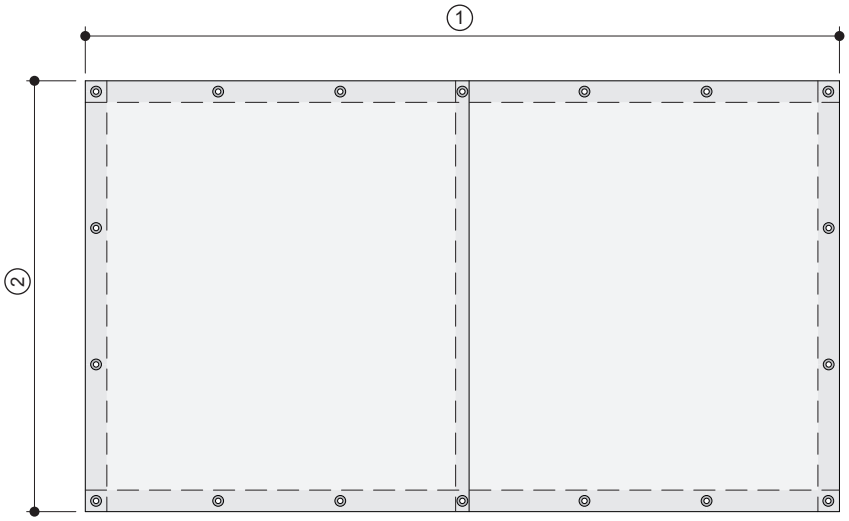

Notes:

- Side and cross seams 40 mm
- Eyelet spacing is 200-250 mm, centred
- Vertical seams or stripes (standard)
- Covers without seams or horizontal stripes possible (max. Cover height 1100 mm)
- Standard eyelet inside ø10 mm

Welded version (glass fibre and PVC-coated polyester fabric)

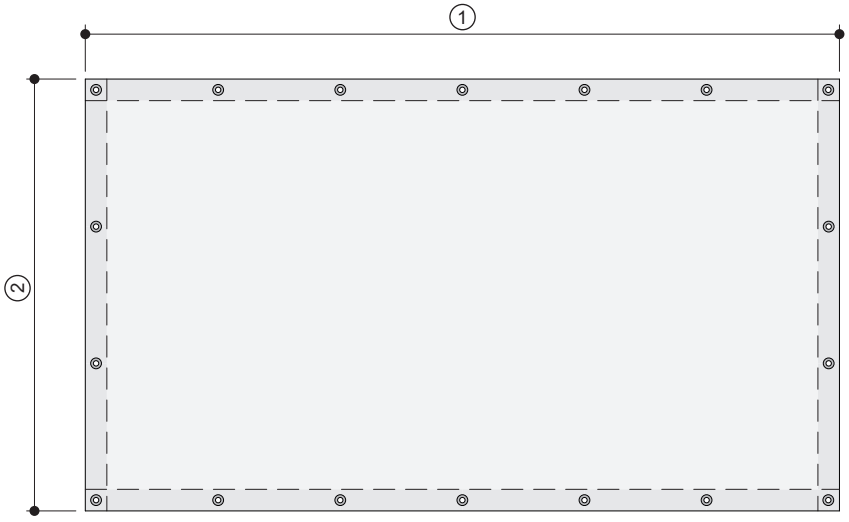

Notes:

- Side and cross seams 40 mm
- Eyelet spacing is 200-250 mm, centred
- Standard eyelet inside ø10 mm

Legend

①	Cover width
②	Cover height

Over-glass/under-glass awnings, Pergola awning

Standard assembly

	Roller tube	Front rail	Roller tube VP roller blind – motor	Front rail VP roller
SOLANYA protect	Clip keder (art. no. 15100008)	PVC keder ø7.0 mm white (art. no. 14700001)		
SOLEYA	Clip keder (art. no. 15100008)	PVC keder ø7.0 mm white (art. no. 14700001)		
SOLEYA protect	Clip keder (art. no. 15100008)	PVC keder ø7.0 mm white (art. no. 14700001)		
ELEGANZA	Clip keder (Art. no. 15100008)	Keder PVC ø7.0 mm white (Art. no. 14700001)	Clip keder (Art. no. 03470314)	Keder PVC ø5.0 mm black (Art. no. 14700006)
ELEGANZA protect	Clip keder (Art. no. 15100008)	Keder PVC ø7.0 mm white (Art. no. 14700001)	Clip keder (Art. no. 03470314)	Keder PVC ø5.0 mm black (Art. no. 14700006)

Cover manufacture

	Type of finishing		Fabric direction			Lateral seam		Cover connection	
			Transverse	Longitudinal					
			with/without seam	with seam	without seam	not SSG	SSG	Roller tube	Front rail
Acrylic fabric	**sewing**	+	-	o	width-dependent	stitched	stitched	Clip keder	Hemstitch
	glueing	o				glued	glued		
	UltraSeam	++				UltraSeam	-		
	welding	-				-	-		
Acrylic All-weather	**sewing**	-	-	o	width-dependent	-	-	Clip keder	Hemstitch
	glueing	o				stitched	stitched		
	UltraSeam	-				-	-		
	welding	-				-	-		
Polyester fabric - PVC-free	**sewing**	-	-	o	width-dependent	-	-	Clip keder	Hemstitch
	glueing	o				glued	glued		
	UltraSeam	++				UltraSeam	-		
	welding	-				-	-		
Twilight Comfort 262 Twilight Elements 214 Twilight Pearl 297	**sewing**	o	-	o	-	stitched	stitched	Clip keder	Hemstitch
	glueing	-				-	-		
	UltraSeam	-				-	-		
	welding	-				-	-		
Polyester fabric - PVC coated	**sewing**	-	o	-	width-dependent	-	-	Clip keder	Hemstitch
	glueing	-					-		
	UltraSeam	-					-		
	welding	o					Spot-welded		

Legend

o	Standard
+	Optional without surcharge
++	optionally available for a surcharge
-	not possible
SSG	side seam guided
*	UltraSeam Standard for SOLANYA

Limit sizes

	Acrylic	Acrylic Lumera	Acrylic All-weather	Starlight (Shiny Polyester)	Twilight Comfort 262/Elements 214/Pearl 297	Soltis 92/96 - Color
Max. width [mm]	6000	6000	6000	6000	5000	5000
Max. sloping projection [mm]	6500	6500	6500	6500	3400	3400

SINTESI

Standard assembly

	Box cover connection	Front rail	
SINTESI	PVC keder ø6.0 mm grey (art. no. 14700025)	PVC keder ø6.0 mm grey (art. no. 14700025)	
SINTESI FREE	PVC keder ø6.0 mm grey (art. no. 14700025)	PVC keder ø6.0 mm grey (art. no. 14700025)	

TERRA SIDE

Standard assembly

	Roller tube	Front rail	
TERRA SIDE	Clip keder (art. no. 15100008)	PVC keder ø5.3 mm black (art. no. 14700008)	

Cover manufacture

	Type of finishing	Fabric direction		Lateral seam	Cover connection	
		Transverse with/without seam		SSG	Roller tube	Front rail
Glass fibre fabric polyester fabric - PVC coated waterproof fabric	**welding**	**o**	**o**	Spot-welded	Clip keder	Hemstitch
Twilight Pearl 297 Twilight Comfort 262 Twilight Elements 214	**sewing**	**o**	**o**	stitched	Clip keder	Hemstitch

Legend

o	Standard
-	not possible
SSG	side seam guided

Limit sizes

	Glass fibre fabric	Polyester- PVC-coated	SOLTIS Veozip - Color	Polyester fabric - PVC-free/ acrylic fabric	Waterproof fabric
Box size 115					
Max. width [mm]	4500	4500	4500	4500	4500
Max. sloping projection [mm]	2500	2500	2500	2500	2500
Max. area [m^2]	11.5	11.5	11.5	11.5	11.5
Box size 130					
Max. width [mm]	6000	4500	6000	6000	4500
Max. sloping projection [mm]	3000	3000	3000	2500	3000
Max. area [m^2]	18	13.5	18	15	13.5

VENTUR SIDE

Standard assembly

	Roller tube	Front rail	
VENTUR SIDE	Clip keder (art. no. 15100008)	PVC keder ø5.3 mm black (art. no. 14700008)	

Cover manufacture

	Type of finishing		Fabric direction Transverse with/without seam	Lateral seam SSG	Cover connection Roller tube	 Front rail
Glass fibre fabric polyester fabric - PVC coated waterproof fabric	**welding**	**o**	**o**	Spot-welded	Clip keder	Hemstitch
Shiny Polyester (plain design only)	**glueing**	**o**	**o**	stitched	Clip keder	Hemstitch
Acrylic (plain design only) Twilight Pearl 297 Twilight Comfort 262 Twilight Elements 214	**sewing**	**o**	**o**	stitched	Clip keder	Hemstitch

Legend

o	Standard
-	not possible
SSG	side seam guided

Limit sizes

	Glass fibre/acrylic fabric	Polyester- PVC-coated	SOLTIS Veozip Color	Polyester fabric - PVC-free	Waterproof fabrics
Max. width [mm]*	6200	5000	6200	6200	4500
Max. height [mm]	3000	3000	3000	3000	3000

Things to know about the cover

Fabric direction

	Longitudinal finishing	Cross finishing
Awning	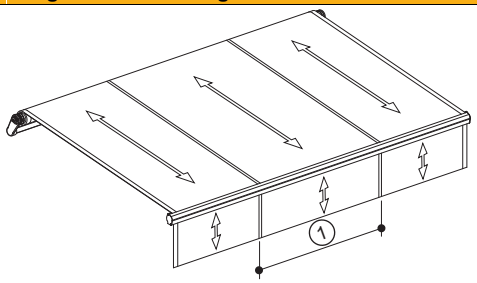	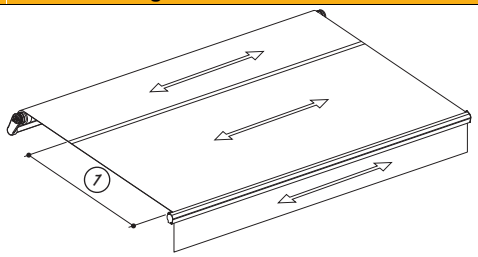
Over-glass and under-glass awnings	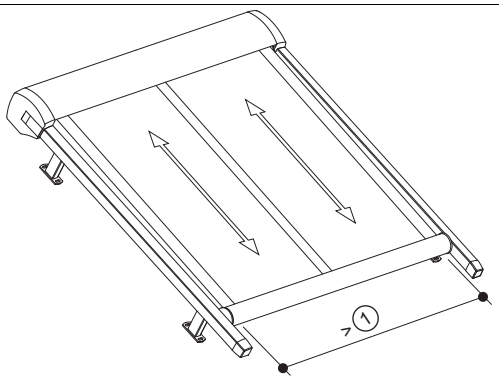	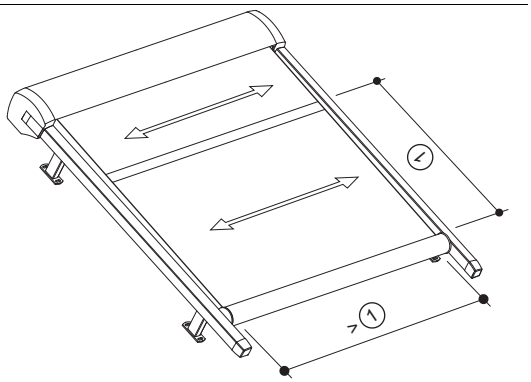
Vertical awnings (VENTUR SIDE/TERRA SIDE)	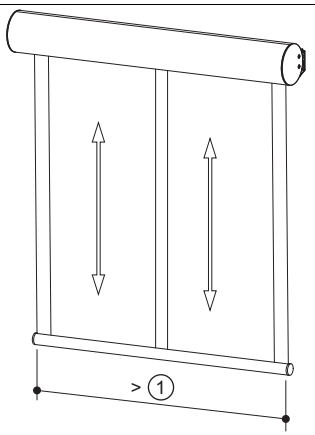	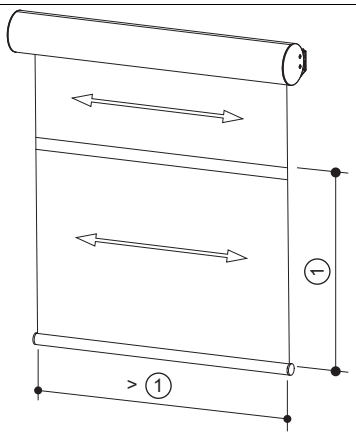

Legend

① Roll width

Lateral seam

sewed



glued

UltraSeam

side seam guided (asymmetrical)

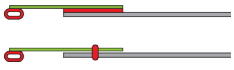

side seam guided (symmetrical)

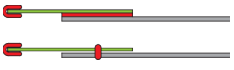

Cover connection roller tube

Hemstitch

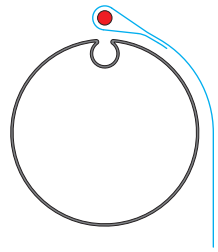

PVC pipe keder
ø6.0 mm white
(art. no. 14700035)

Clip keder

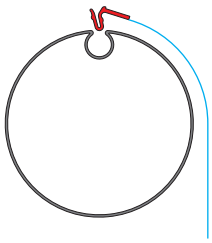

Clip keder

(art. no. 15100001)
Only for paired articulated arm awnings.

Clip keder

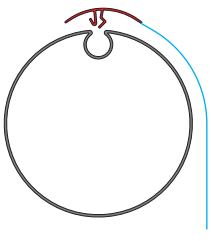

y

Clip keder

(art. no. 15100008)
VENTUR SIDE/TERRA SIDE, over-glass and under-glass awning, pergola awning

Magnetic claw keder

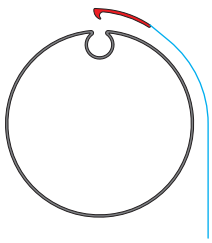

Magnetic claw keder

(art. no. 15100035)
Only possible for acrylic and polyester.
Recommendation: For replacement covers, hence easy installation. In addition to the size of the projection, the new cover must be ordered with an additional 350 mm for the security wrapping.

Cover connection front rail

Hemstitch
Awning

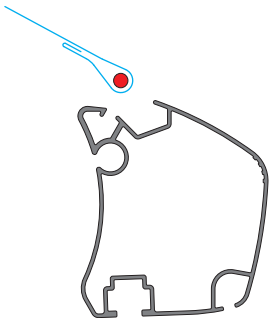

PVC pipe keder
ø6.0 mm white
(art. no. 14700035)

Hemstitch
Over-glass and under-glass awnings and pergola awning

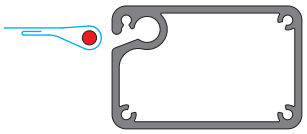

PVC keder
ø7.0 mm white
(art. no. 14700001)

Hemstitch
SINTESI

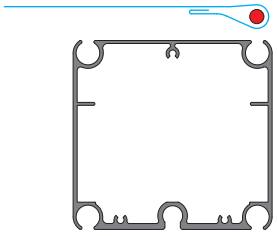

PVC keder
ø6.0 mm grey
(art. no. 14700025)

Hemstitch
Vertical awning

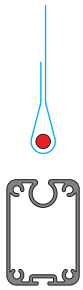

PVC keder
ø5.3 mm white
(art. no. 14700008)
VENTUR SIDE/TERRA SIDE

Cover connection Varioplus roller blind

Clip keder
Roller tube

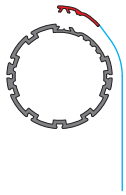

Clip keder

(Art. no. 03470314)
This keder is only used for Varioplus roller blinds with motorised drive.

Hemstitch
Roller tube

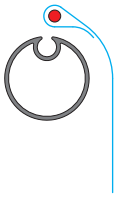

Keder PVC
ø5.0 mm black
(Art. no. 14700006)
Standard keder for Varioplus roller blind with crank drive.

Hemstitch
Front rail

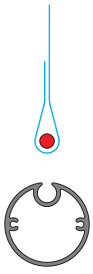

Keder PVC
ø5.0 mm black
(Art. no. 14700006)

Things to know about the cover

Appearance of the awning covers

Wave or crease formation in the marginal area of the guide rails are construction related with zipper-guided covers and cannot be avoided as cover and zipper lie on top of each other and cover different paths during winding.
As a result of this, the cover is folded several times over the circumference on the edge during winding. This can be observed as a "wave" or even a "kink" upon unwinding.

This increasingly occurs with SOLTIS covers or rigid covers.

This is state of the art, which is why the directive for the evaluation of ready-made awning covers (version 01/2018) applies (see chapter "Evaluation of product features").



Notes regarding the visual appearance of awning covers are included in the “IVRSA Guidelines for the assessment of ready-made awning covers” (see chapter “General information - assessment of product features”).

Waviness in the web area



Waviness in the seam area



Short cord break

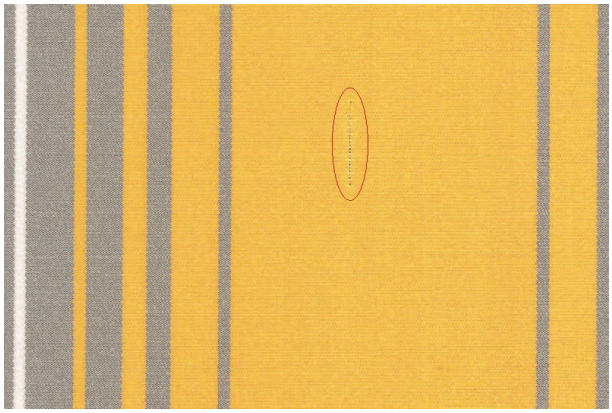

Waviness and over-stretching in the hem area



Cover types

Glass fibre fabric

HELLA:

G-Screen

Material: Glass fibre fabric, PVC coated
Thickness of the material: 0.73mm
Basis weight: approx. 515 g/m²
Openness coefficient: 5%
Light fastness: min. 7-8
Cover can be labelled: yes (upon request)
Flammability: DIN 4102-1 B1 (additional classifications see collection)
Fabric width*: 2000/2500/2900/3200 millimetres

ATTENTION! From a certain size upwards transverse seams can exist. (due to manufacturing)

Copaco:

Serge 600

Material: Glass fibre fabric, PVC coated
Material thickness: 0.74 mm
Basis weight: approx. 525 g/m²
Openness coefficient: 5 %
Light fastness: min. 7-8
Cover webs can be adhesive bonded: no
Cover to be labelled: suitable to only a limited extent (please contact us)
Flammability: DIN 4102-1 B1 (additional classifications see collection)
Fabric width*: 1600/1900/2200/2500/2700/3200/3500 mm

NOTE: Transverse seams may be present above a certain size. (for production reasons)
* ... not available for all colours

Serge 1 %

Material: Glass fibre fabric, PVC coated
Material thickness: 0.80 mm
Basis weight: approx. 620 g/m²
Openness coefficient: 1 %
Light fastness: min. 7-8
Cover webs can be adhesive bonded: no
Cover to be labelled: suitable to only a limited extent (please contact us)
Flammability: DIN 4102-1 B1 (additional classifications see collection)
Fabric width*: 2700 mm

NOTE: Transverse seams may be present above a certain size. (for production reasons)
* ... not available for all colours

Mermet:

CLASSIC SATINÉ 5500

Material: Glass fibre fabric, PVC coated
Material thickness: 0.75 mm
Basis weight: approx. 520 g/m²
Openness coefficient: 4 %
Light fastness: min. 7
Cover webs can be adhesive bonded: no
Cover can be labelled: yes
Flammability DIN 4102-1 B1 (additional classifications see collection)
Fabric width*: 2000/2500/2850/3200 mm

NOTE: Transverse seams may be present above a certain size. (for production reasons)
* ... not available for all colours

CLASSIC NATTÉ 4503

Material: Glass fibre fabric, PVC coated
Material thickness: 0.53 mm
Basis weight: approx. 560 g/m²
Openness coefficient: 3 %
Light fastness: min. 7
Cover webs can be adhesive bonded: no
Cover can be labelled: yes
Flammability DIN 4102-1 B1 (additional classifications see collection)
Fabric width: 2500, 3200 mm

NOTE: Transverse seams may be present above a certain size. (due to manufacturing)

Cover types

Polyester- PVC-coated

Serge Ferrari:

Soltis 86 - Color/Alu

Material: polyester, PVC-coated
Material thickness: 0.43 mm
Basis weight: approx. 380 g/m²
Openness coefficient: 14 %
Cover webs weldable: yes
Cover to be labelled: yes (additional charge)
Flammability: DIN 4102-1 B1 (additional classifications see collection)
Cover width*: 1770/2670 mm

NOTE: Transverse seams may be present above a certain size. (due to manufacturing)
* ... not available for all colours

Soltis 88 - Color/Alu

Material: Backing fabric Polyester, PVC-coated
Material thickness: 0.45 mm
Basis weight: approx. 360 g/m²
Openness coefficient: 8 %
Cover webs can be adhesive bonded: no
Cover to be labelled: yes (additional charge)
Flammability: DIN 4102-1 B1 (additional classifications see collection)
Fabric width*: 1770/2670 mm

NOTE: Transverse seams may be present above a certain size. (due to manufacturing)
* ... not available for all colours

Soltis 92 - Color/Alu

Material: polyester, PVC-coated
Material thickness: 0.45 mm
Basis weight: approx. 420 g/m²
Openness coefficient: 3 %
Cover webs weldable: yes
Cover to be labelled: yes (additional charge)
Flammability: Austrian Standard (ÖNORM) B-3800-1 B1
DIN 4102-1 B1
Cover width*: 1770/2670 mm

NOTE: Transverse seams may be present above a certain size. (due to manufacturing)
* ... not available for all colours

Soltis 96 - Color

Material: polyester, PVC-coated
Material thickness: 0.45 mm
Basis weight: 400 g/m²
Openness coefficient: 4 %
Cover webs weldable: yes
Cover to be labelled: yes (additional charge)
Cover width: 2670 mm

NOTE: Transverse seams may be present above a certain size. (due to manufacturing)

Soltis Veozip - Color

Material: polyester, PVC-coated
Material thickness: 0.90 mm
Basis weight: approx. 600 g/m²
Openness coefficient: approx. 5 %
Cover webs weldable: yes
Cover to be labelled: yes (additional charge)
Flammability: M1 (see collection for other classifications), B1/DIN 4102-1, Euro class B-s2, d0
Fabric width: 2900/3200 mm

NOTE: Transverse seams may be present above a certain size. (due to manufacturing)

Polyester - free of PVC

Parà:

Starlight (Shiny Polyester) (Norm 370 XL, Starlight)

Material: Polyester	**Water resistance:** approx. 300 mm WS
Material thickness: 0.44 mm	**Water proofing:** mark 100
Basis weight: approx. 300 g/m²	**Cover webs can be adhesive bonded:** yes (Standard)
Light fastness: min. 7	**Cover to be labelled:** no
	Cover width: 1200 mm

Starlight blue (recycled polyester)

Material: 85 % RECYCELD PET/15 % PET	**Water resistance:** approx. 380 mm WS
Material thickness: 0.44 mm	**Water proofing:** mark 100
Basis weight: approx. 290 g/m²	**Cover webs can be adhesive bonded:** yes (Standard)
Light fastness: min. 7	**Cover to be labelled:** no
	Cover width: 1200 mm

SATTLER:

Twilight Pearl 297

Material: Polyester fabric, PVC-free	**Cover webs can be adhesive bonded:** no
Material thickness: 0.50 mm	**Cover to be labelled:** no
Basis weight: approx. 330 g/m²	**Flammability:** DIN 4102-1 B1 (additional classifications see collection)
Light fastness min. 6-7	**Fabric width*:** 1800/2600 mm

NOTE: Transverse seams may be present above a certain size. (for production reasons)
* ... not available for all colours

Firemaster - Colours: acc. to colour chart

Fabric: Polyester Modacrylic PES/MAC	**Water proofing:** mark 90
Thickness of the material: 0.60 mm	**Light fastness:** min. 7 (coated side)
Basis weight: approx. 400 g/m²	**Cover to be glued together:** no
Tensile strength: approx. 185/90 daN/5 cm	**Cover to be labelled:** yes (surcharge!)
Water resistance: approx. 800 mm WS	**Flammability:** Austrian Standard (ÖNORM) A-3800-1 B1 DIN 4102-1 B1
	Fabric width: 1200 mm

Insect protection fabric - protect

Phifer:

InsectScreen

Material: vinyl-coated polyester fabric	**Opening factor:** ca. 45 %
Thickness of the material: 0.60 mm	**Fabric width:** up to 3500 mm
Basis weight: 230 g/m²	**Color:** black

Cover types

Acrylic

Acrylic fabric (standard 320, standard 30A, standard 364, Urban Design)

Material: Acrylic fibre	**Water resistance:** approx. 350 mm WS
Thickness of the material: 053 mm	**Water proofing:** mark 100
Basis weight: approx. 285 g/m²	**Cover webs can be glued:** yes
Light fastness: min. 7	**Cover to be labelled:** yes (surcharge!)
	Fabric width: 1200mm

Acrylic Lumera

Material: Acrylic fabric (CBA)	**Water resistance:** approx. 460 mm WS
Thickness of the material: 053 mm	**Water proofing:** mark 100
Basis weight: approx. 290 g/m²	**Cover webs can be glued:** yes
Light fastness: min. 7	**Cover to be labelled:** yes (surcharge!)
	Fabric width: 1200mm

Twilight Comfort 262

Material: Acrylic/polyester fabric, PVC-free	**Cover webs can be adhesive bonded:** no
Material thickness: 0.55 mm	**Cover to be labelled:** no
Basis weight: approx. 235 g/m²	**Flammability:** No manufacturer's data
Light fastness: min. 6-7	**Fabric width:** 3000 mm

NOTE: Transverse seams may be present above a certain size. (due to manufacturing)

Twilight Elements 214

Material: Acrylic fabric SDA, PVC-free	**Cover webs can be adhesive bonded:** yes
Material thickness: 0.60 mm	**Cover to be labelled:** yes (additional charge)
Basis weight: approx. 290 g/m²	**Fire performance:** no fire protection rating
Light fastness min. 7	**Fabric width:** 2400/2500 mm
Openness coefficient: approx. 0 %	

NOTE: Transverse seams may be present above a certain size. (due to manufacturing)

Allwetter

SATTLER:

All-weather

Material: Acrylic fibre	**Water resistance:** approx. 1000 mm WS
Thickness of the material: 053 mm	**Water proofing:** mark 90
Basis weight: approx. 340 g/m²	**Cover webs can be glued:** yes
Light fastness: min. 7	**Cover to be labelled:** yes (surcharge!)
	Fabric width: 1200mm

Comment:

The stated prices are subject to technical clarification concerning the feasibility (box size, limit sizes) and necessities of transverse seams!

Colors as per current, applicable collection.
Longer delivery times must be considered depending on the color and the cover width!

Legend

WS Water column
B1 Of low flammability

AWNINGS

Type overview

AREIA 6030



AREIA 7040



VIVA 7040



PAN 7040



	AREIA 6030	AREIA 7040	VIVA 7040	PAN 7040
Max. width [mm]*				
Single unit	6000	7000	7000	7000
Linked	-	14000	14000	-
Max. sloping projection [mm]				
Single unit	3000	4000	4000	4000
Linked	-	4000	4000	-
Design	Open	Open	open/sleeve	Cassette
Folding arm	Extruded aluminium, cast aluminium joints, heavy-duty parts drop-forged, high-strength tension band concealed			
Inclination: (range of adjustment)				
Wall installation	5° - 60°	A ≤3000 mm: 5° - 60° A 3500/4000 mm: 0° - 40°	0° - 40°	5° - 40°
Ceiling installation	5° - 60°	A ≤3000 mm: 5° - 60° A 3500/4000 mm: 0° - 40°	0° - 40°	-
Drive system				
Crank***	+	+	+	-
Motor	o	o	o	o
Radio motor with emergency crank handle**	+	+	+	+
Variomatic				
Central tilt adjustment up to 3500 mm drop (note maximum widths for 3500 mm)	-	-	+	-
Varioplus roller blind				
Varioplus roller blind in the front rail	-	+	+	-
Full-length cover				
For linked sets	-	+	+	-
Valance				
5 different shapes - all cover designs	o	o	o	-
Arm covering profile	-	-	+	-
Wall connection profile	-	-	+	-
Rain shelter	+	+	-	-
Frame colors (RAL)				
Standard colors	Available in 3 standard colours	o	o	o
"MULTICOLOR"	-	+	+	+
"HWF"	-	+	+	+
"1000 COLORS"	-	+	+	+
Fixing				
Wall bracket	o	o	o	o
Ceiling bracket	+	+	+	-
Rafter Bracket	+	+	+	-
Light/heating				
LED integrated in the folding arm	-	+	+*	+
Awning heating	+	+	+	+

* ... LED not combinable with central tilt adjustment with crank/motor

**... Radio motor with emergency hand crank not available for coupled awnings

***... Crank drive only with 2 articulated arms up to max. 3500 mm drop

Legend

o	Included in the delivery	-	Not available
+	Surcharge / price reduction	A	Sloping projection

Type overview

CLEO 5530



CLEO 7030



CLEO 7040



	CLEO 5530	CLEO 7030	CLEO 7040
Max. width [mm]			
Single unit	5500	7000	7000
Linked	-	-	-
Max. sloping projection [mm]			
Single unit	3000	3000	4000
Linked	-	-	-
Design	Cassette	Cassette	Cassette
Articulated arm	Extruded aluminium, cast aluminium joints, heavy-duty parts drop-forged, high-strength tension band concealed		
Inclination: (range of adjustment)			
Wall installation	Operating handle: 5° - 45° Motor: 5° - 65°	5° - 45°	5° - 40°
Ceiling installation	5° - 80°	5° - 45°	5° - 40°
Drive system			
Crank***	+	+	+
Motor	o	o	o
Wireless motor with emergency crank handle**	+	+	+
Variomatic			
Central tilt adjustment up to 3500 mm drop (note maximum widths for 3500 mm)	-	-	-
Varioplus roller blind			
Varioplus roller blind in the front rail	-	-	+
Full-length cover			
For linked sets	-	-	-
Valance			
5 different shapes - all cover designs	-	-	-
Arm covering profile	-	-	-
Wall connection profile	-	-	-
Rain shelter	-	-	-
Frame colors (RAL)			
Standard colors	o	o	o
"MULTICOLOR"	+	+	+
"HWF"	+	+	+
"1000 COLORS"	+	+	+
Fixing			
Wall bracket	o	o	o
Ceiling bracket	o	+	+
Rafter Bracket	-	+	+
Light/heating			
LED integrated in the articulated arm	-	-	+
Awning heating	+	+	+

**... Radio motor with emergency hand crank not available for coupled awnings

***... Crank drive only with 2 articulated arms up to max. 3500 mm drop

Legend

o Included in the delivery

\- Not available

\+ Surcharge / price reduction

Type overview

C2



Wind-/sight screen



	C2	Wind-/sight screen
Max. width [mm]*		
Single unit	7000	1900
Linked	14000	-
Max. sloping projection [mm]		
Single unit	4000	4000
Linked	4000	-
Design	Cassette	Box
Folding arm	Extruded aluminium, cast aluminium joints, heavy-duty parts drop-forged, round steel link chain	-
Inclination: (range of adjustment)		
Wall installation	5° - 40°	-
Ceiling installation	5° - 40°	-
Drive system		
Crank***	+	-
Motor	o	-
Radio motor with emergency crank handle**	+	-
Variomatic		
Central tilt adjustment up to 3500 mm drop (note maximum widths for 3500 mm)	-	-
Varioplus roller blind		
Varioplus roller blind in the front rail	+	-
Full-length cover		
For linked sets	+	-
Valance		
5 different shapes - all cover designs	+	-
Arm covering profile	-	-
Wall connection profile	+	-
Rain shelter	-	-
Frame colors (RAL)		
Standard colors	o	o
"MULTICOLOR"	+	+
"HWF"	+	+
"1000 COLORS"	+	+
Fixing		
Wall bracket	o	-
Ceiling bracket	+	-
Rafter Bracket	+	-
Light/heating		
LED integrated in the folding arm	-	-
Awning heating	+	-

**... Radio motor with emergency hand crank not available for coupled awnings

***... Crank drive only with 2 articulated arms up to max. 3500 mm drop

Legend

o	Included in the delivery	-	Not available
+	Surcharge / price reduction		

Folding arm awning – AREIA 6030



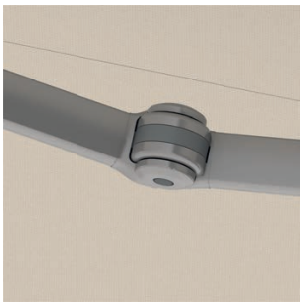

The stable arm joint enables dimensions of 6x3 m.



Quality awning with convincing price-performance ratio; frame color available in 3 HELLA colors:
RAL 9006, RAL 9016, RAL 7016



Discreet drop profile with valance.

Limit sizes

Awning

Limit sizes with sloping projection [mm]	1500	2000	2500	3000
Single unit				
Maximum width	6000	6000	6000	6000
Number of folding arms up to 6000 mm width	2	2	2	2
Minimum width with crank handle	2140	2540	3060	3540
Minimum width with motor (2 arms)	2070	2470	2990	3470

Cover

Single unit	Acrylic fabric	Acrylic All-weather	324 Firemaster	Polyester fabric - PVC-free	Polyester fabric - PVC coated
Maximum width [mm]	6000	6000	6000	6000	4000
Maximum sloping projection [mm]	3000	3000	3000	3000	3000

Types of installation

Wall installation

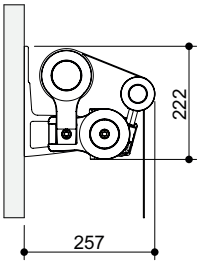

Ceiling installation

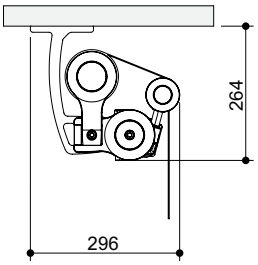

Rafter installation

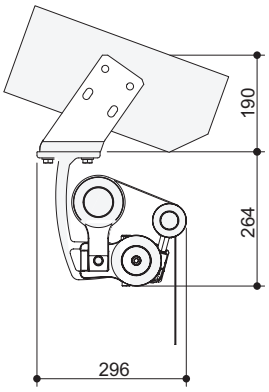

Wall installation with rain shelter

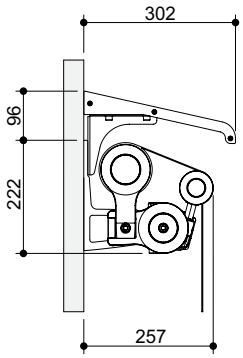

Scope of delivery

- AREIA 6030 folding arm awning in three frame colors RAL 9006, RAL 9016 and RAL 7016
- Large selection of sewn acrylic and polyester awning fabrics
- Motor drive for switch operation
- Wall bracket for mounting on concrete (C20/C25) or metal incl. design for brackets on alternative mounting surface and mounting types
- Valance with edging strips
- Folding arm with hidden glass traction system
- Inclination adjustment 5° - 60°

Supplementary equipment

- Brackets for wall, ceiling or rafter mounting
- Cloths made of all-weather, recycled polyester and SOLTIS
- Glued and UltraSeam covers
- Operation with crank and radio motor
- Sensors for wind, sun and precipitation
- Rain cover to protect the cover from the elements
- Infrared radiant heater

Benefits of the product

- Inexpensive entry-level model
- Heat protection
- Glare protection
- Sight screen
- Protection from UV radiation
- High-quality construction elements guarantee a long lifespan and convenient operation

Folding arm awning – AREIA 6030

Brackets

Wall bracket Type A

Art. no. 034705V1

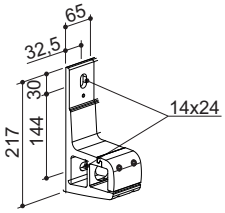

Wall bracket type B

Art. no. 03470534

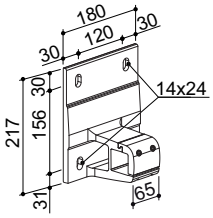

Wall bracket type C

Art. no. 034705U5

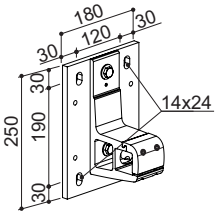

Wall bracket type D

Art. no. 034705U7

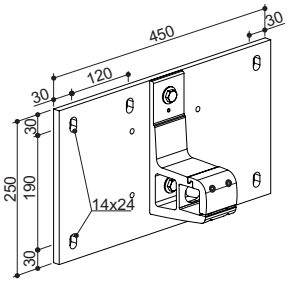

Ceiling bracket Type E

Art. no. 034705U2

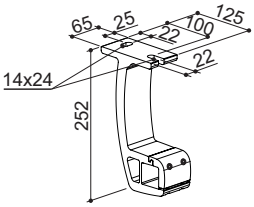

Ceiling bracket type F

Art. no. 034705U4

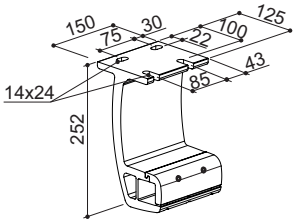

Ceiling bracket type G

Art. no. 034705U6

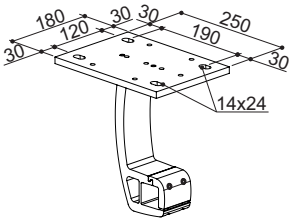

Ceiling bracket type H

Art. no. 034705U8

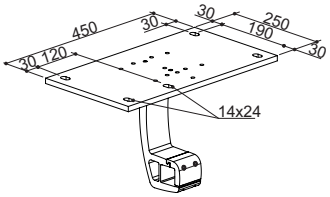

Wall bracket type I
Ceiling face

Art. no. 034705V3

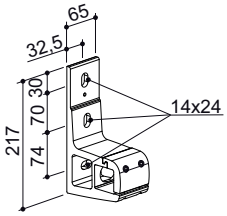

Rafter bracket type K on the left side

Art. no. 034705U9

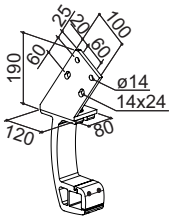

Weight in kg depending on the width and the sloping projection

Width [mm]	Projection [mm]			
	1500	2000	2500	3000
2500	28	29		
3000	31	32	33	
3500	34	35	37	41
4000	37	39	40	44
4500	41	42	43	47
5000	44	45	47	51
5500	47	48	50	54
6000	50	51	53	57

Legend

Weight [kg] with 2 folding arms

Definition maximum sloping projection (with inclination 15°)

Horizontal projection ①	1500	2000	2500	3000
x	1615	2000	2495	2955

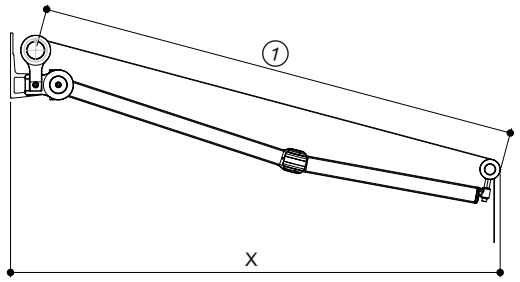

Folding arm awning – AREIA 6030

Standard dimensions arm bearing position

In one piece with 2 folding arms

Projection [mm]			Width [mm]									
			to 2500	2501-2900	2901-3400	3401-3900	3901-4400	4401-4650	4651-4900	4901-5150	5151-5400	5401-5650	5651-6000
1500	B/C	D_{min} = 1860	105*	300	400	500	600	800	800	900	900	1000	1000
	E												
2000	B/C	D_{min} = 2260		105*	270	500	600	800	800	900	900	1000	1000
	E												
2500	B/C	D_{min} = 2780			105*	270	500	700	700	900	900	1000	1000
	E												
3000	B/C	D_{min} = 3260				105*	270	500	600	700	800	1000	1000
	E												

*** Measurements:**

- With design single unit with crank handle: Dimension +35 mm:
- Minimum dimensions B/C, if 2 brackets per arm bearing are required:
  - in combination with mounting bracket type A, B, C, I, K, E or G: 200 mm
  - in combination with mounting bracket type F: 280 mm
  - in combination with mounting bracket type D or H: 315 mm
- Measurements are not added up. The largest measurement for the relevant design is used.

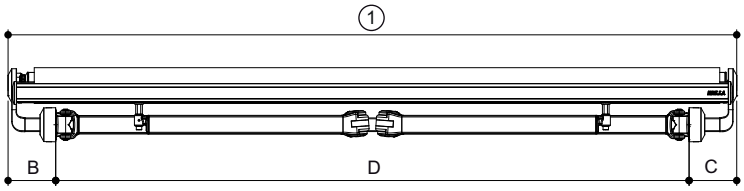

Collision check: $D_{min} \geq FB - B - C$

Please note: Observe minimum widths depending on the design!

Legend

①	Ordering width
B/C	Dimension from the outer edge of the awning up to the centre of the arm bearing

- Mount the brackets with a max. distance of 400 mm to the arm bearing.
- Dimension from the outer edge of the awning up to the middle 1. Bracket max. 1100 mm.

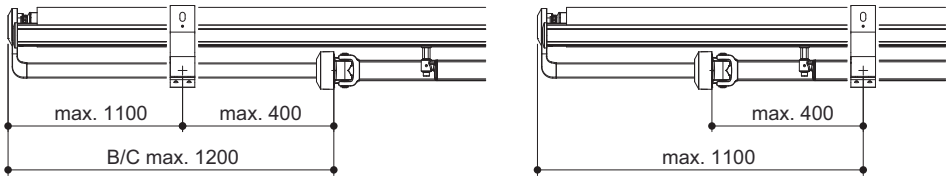

Attention:

As soon as two brackets are defined per arm bearing, these should be installed to the left and right of the arm bearing!

Folding arm awning – AREIA 7040



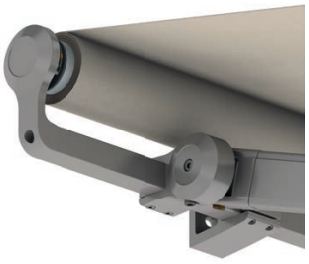

Harmonious design, with contours running into each other.



Folding arm with hidden, high-strength pull tape, optionally available with integrated LED lighting.



Varioplus roller blind integrated in the extension tube, as additional sun and view protection.

Limit sizes

Awning

Min./max. dimensions with sloping projection [mm]	1500	2000	2500	3000	3500	4000
Single unit						
Maximum width	7000	7000	7000	7000	7000	7000
Number of articulated arms up to 6000 mm width	2	2	2	2	2	2
Number of articulated arms 6001 - 6189 mm width	3	3	3	3	2	-
Number of articulated arms with 6190 - 6939 mm width	3	3	3	3	3	-
Number of articulated arms with 6940 - 7000 mm width	3	3	3	3	3	3
Minimum width with crank	2150	2650	3150	3650	4230	-
Minimum width with motor (2 arms)	2080	2580	3080	3580	4160	4660
Minimum width with motor (3 arms)	3070	3820	4570	5320	6190	6940
Minimum width with motor (4 arms)	4050	5050	6050			
paired unit						
Maximum width	14000	14000	14000	14000	14000	14000
Number of articulated arms up to 12000 mm width	4	4	4	4	4	4
Number of articulated arms with 12001 - 12339 mm width	6	6	6	6	4	-
Number of articulated arms with 12340 - 13839 mm width	6	6	6	6	6	-
Number of articulated arms with 13840 - 14000 mm width	6	6	6	6	6	6
Minimum width with motor (4 arms)	4120	5120	6120	7120	8280	9280
Minimum width with motor (6 arms)	6090	7590	9090	10590	12340	13840

Attention:

Single units with 3 and 4 articulated arms or a sloping projection of 4000 mm and paired units are only possible with a motor.

Cover

Single unit	Acrylic fabric	Acrylic All-weather	324 Firemaster*	Polyester fabric - PVC-free	Polyester fabric - PVC coated*
Maximum width [mm]	7000	7000	7000	7000	4000
Maximum projection [mm]	4000	3500	3000	4000	3500

* The 324 Firemaster and Polyester fabric - PVC coated covers are not compatible with linked units.

Types of installation

Wall installation

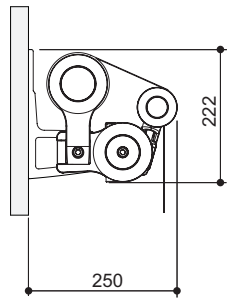

Ceiling installation

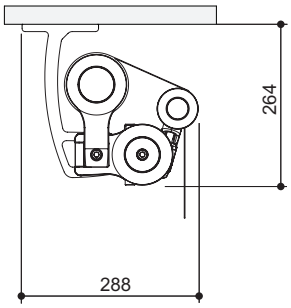

Rafter installation

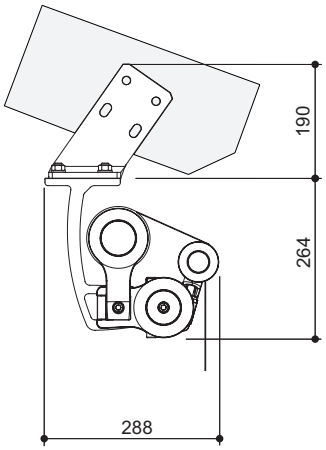

Wall installation with rain shelter

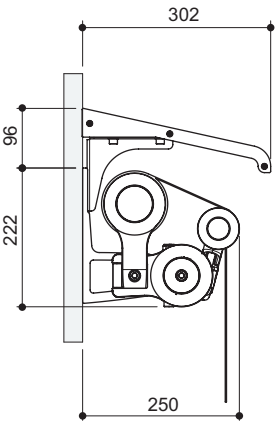

Option - Varioplus roller blind (VP)

Wall installation

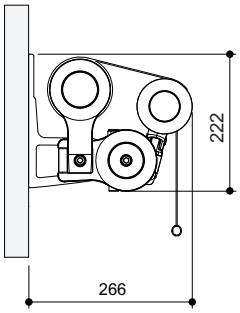

Ceiling installation

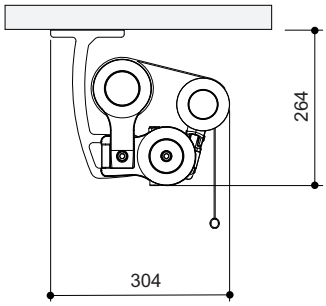

Rafter installation

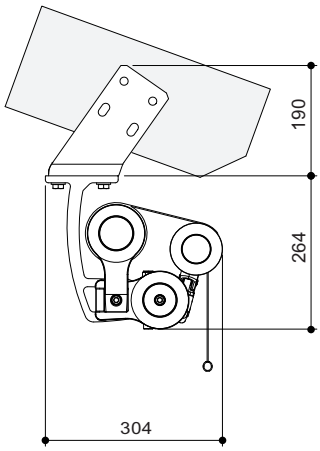

Integrated in the extension tube, as additional sun and view protection.

Operation via special gear with crank rod, radio motor or motor with switch operation.

Varioplus roller blind - maximum height of roller blind [mm]

	Acrylic fabric	Acrylic All-weather	Polyester fabric - PVC-free	Polyester fabric - PVC coated
Crank drive	1900	1900	1900	2500
Motor drive	1000	1000	1000	1500

The cover width equals the awning cover. Tolerance of variations in length acc. to EN 13561.

Scope of delivery

- AREIA 7040 articulated arm awning with freely selectable frame color from the HELLA Color worlds
- Large selection of sewn acrylic and polyester awning fabrics
- Motor drive for switch operation
- Wall bracket for mounting on concrete (C20/C25) or metal including design for brackets on alternative installation base and mounting types
- Valance with edging strips
- Articulated arm with concealed pull system
- Inclination adjustment:
  Projection up to 3000 mm: 5° - 60°
  Projection 3500/4000 mm: 0° - 40°

Supplementary equipment

- Linked design up to a width of 14 m
- Brackets for wall, ceiling or rafter mounting
- Covers made from All-weather, recycled polyester and SOLTIS
- bonded and UltraSeam fabrics
- Operation with crank and wireless motor
- Sensors for wind, sun and rain
- Varioplus roller blind for low sun and protection from unwanted glances
- LED lighting for a pleasant ambience
- Rain cover to protect the cover from the elements
- Infrared radiant heater

Benefits of the product

- Heat protection
- Glare protection
- Privacy
- Protection against UV radiation
- Atmosphere
- Design element
- High-quality construction elements guarantee a long lifespan and convenient operation
- Large color selection for colour coordination with the façade

Folding arm awning – AREIA 7040

Brackets

Wall bracket Type A

Art. no. 034705V1

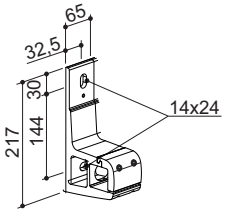

Wall bracket type B

Art. no. 03470534

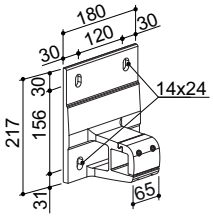

Wall bracket type C

Art. no. 034705U5

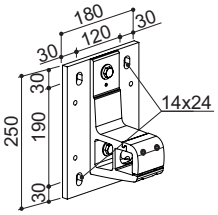

Wall bracket type D

Art. no. 034705U7

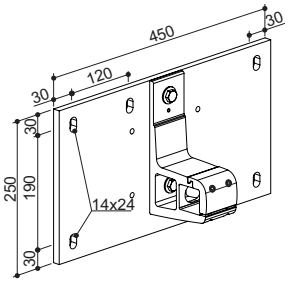

Ceiling bracket Type E

Art. no. 034705U2

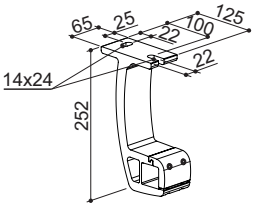

Ceiling bracket type F

Art. no. 034705U4

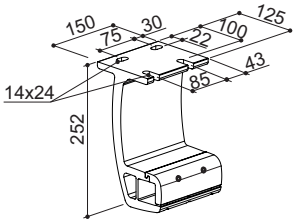

Ceiling bracket type G

Art. no. 034705U6

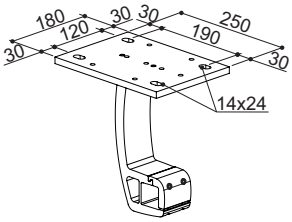

Ceiling bracket type H

Art. no. 034705U8

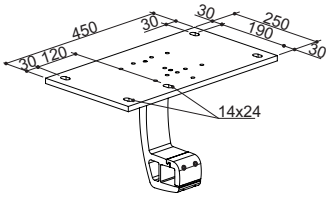

Wall bracket type I
Ceiling face

Art. no. 034705V3

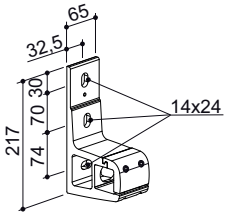

Rafter bracket type K on the left side

Art. no. 034705U9

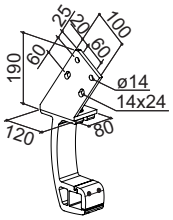

Weight in kg depending on the width and the sloping projection

Width [mm]	1500	2000	2500	3000	3500	4000	Varioplus
	Projection [mm]						Additional weights
2500	33	33					8
3000	36	36					9
3500	40	40	45				11
4000	43	43	48	53			12
4500	46	46	51	56	60		13
5000	50	50	55	60	63	66	15
5500	53	53	58	63	67	70	16
6000	56	56	62	67	70	73	17
6500	66	66	73	80	83		
7000	69	69	77	84	86	90	

Extra weights [kg]

additional folding arm	8
LED lighting	2

Legend

	Weight [kg] with 2 folding arms
	Weight [kg] with 3 folding arms

Definition maximum sloping projection (with inclination 15°)

Horizontal projection ①	1500	2000	2500	3000	3500	4000
x (Top 50)	1555	2035	2510	2985	-	-
x (Top 80)	1665	2145	2620	3095	3575	4050
x (Top 80 with VP)	1675	2150	2630	3105	3585	-

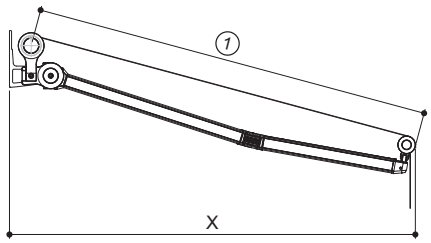

AREIA 7040 with folding arm Top 50
Standard for sloping projection <= 3000

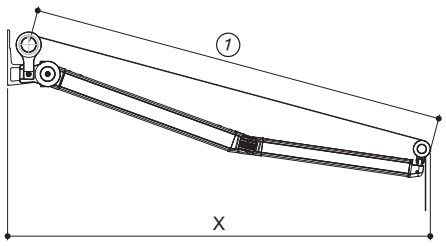

AREIA 7040 with folding arm Top 80
Standard for sloping projection 3500 mm and 4000 mm
With LED for sloping projection 1500 mm up to 4000 mm

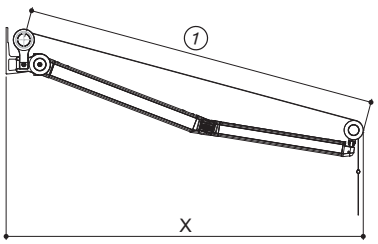

AREIA 7040 with folding arm Top 80 with Varioplus roller blind
For sloping projection 1500 mm up to 3500 mm

Folding arm awning – AREIA 7040

Standard dimensions arm bearing position

In one piece with 2 articulated arms

Projection [mm]		Width [mm] to 2500	2501-2900	2901-3400	3401-3900	3901-4400	4401-4650	4651-4900	4901-5150	5151-5400	5401-5650	5651-6000
1500	B/C	D_{min} = 1865 105*	300	400	500	600	800	800	900	900	1000	1000
	E											
2000	B/C	D_{min} = 2365	105*	270	500	600	800	800	900	900	1000	1000
	E											
2500	B/C	D_{min} = 2865		105*	270	500	700	700	900	900	1000	1000
	E											
3000	B/C	D_{min} = 3370			105*	270	500	600	700	800	1000	1000
	E											
3500	B/C	D_{min} = 3945				105*	220	270	400	600	700	800
	E											
4000	B/C	D_{min} = 4445						105*	220	350	470	600
	E											

*** Measurements:**

- With design single unit with crank handle: Dimension +35 mm:
- Minimum dimensions B/C, if 2 brackets per arm bearing are required:
  - in combination with mounting bracket type A, B, C, I, K, E or G: 200 mm
  - in combination with mounting bracket type F: 280 mm
  - in combination with mounting bracket type D or H: 315 mm
- Measurements are not added up. The largest measurement for the relevant design is used.

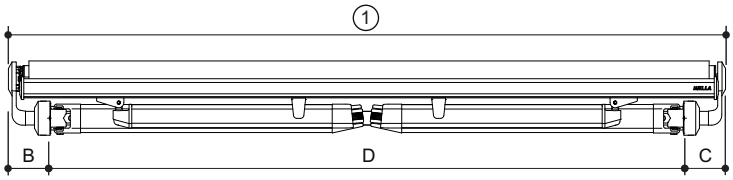

Collision check: $D_{min} \geq FB - B - C$

Please note: Observe minimum widths depending on the design!

Legend

①	Ordering width
B/C	Dimension from the outer edge of the awning up to the centre of the arm bearing
E/F	Dimension from the outer edge of the awning to the middle of the arm bearing (with 3-arm units always seen from the drive side, with 4-arm units as shown)
D/D1/D2	Dimension from the centre of the arm bearing up to the centre of the arm bearing

In one piece with 3 articulated arms

Projection [mm]		to 3400	3401-3900	3901-4400	4401-4650	4651-4900	4900-5150	5151-5400	5401-5650	5651-6000	6001-6500	6501-6750	6751-7000
		Width [mm]											
1500	B/C	$D1_{min}$ = 1865	105*	160	400	600	600	700	700	800	800	900	900	900
	E		1975*	2100	2300	2600	2600	2700	2850	3000	3150	3350	3600	3600
2000	B/C	$D1_{min}$ = 2365		105*	105*	200	300	350	500	600	700	900	900	1000
	E			2475*	2500*	2600	2700	2800	2900	3000	3150	3350	3600	3700
2500	B/C	$D1_{min}$ = 2865				105*	105*	200	200	300	400	600	800	900
	E					2975*	3000*	3100	3100	3200	3300	3500	3700	3800
3000	B/C	D1min = 3370							105*	105*	200	400	500	600
	E								3475*	3500*	3600	3800	3900	4000
3500	B/C	D1min = 3945										105*	250	350
	E											4050*	4200	4300
4000	B/C	D1min = 4445												105*
	E													4550

Legend

optionally available for a surcharge

*** Measurements:**

- With linked units: Dimension +15 mm.
- Minimum dimensions B/C, if 2 brackets per arm bearing are required:
  - in combination with mounting bracket type A, B, C, I, K, E or G: 200 mm
  - in combination with mounting bracket type F: 335 mm
  - in combination with mounting bracket type D or H: 315 mm
- Measurements are not added up. The largest measurement for the relevant design is used.

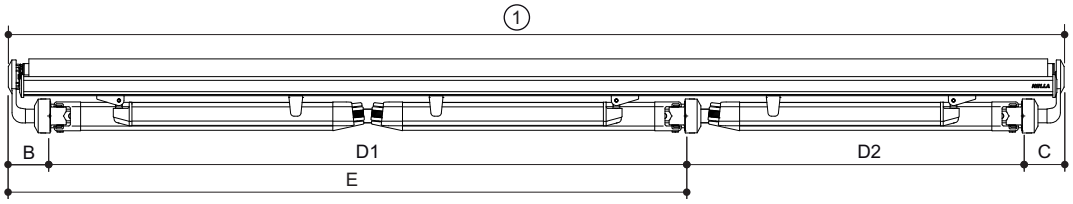

Collision check with drive system on the left side: $D1_{min} \geq E - B$ $D2_{min} \geq FB - C - E$

Collision check with drive system on the right side: $D1_{min} \geq E - C$ $D2_{min} \geq FB - B - E$

Please note: Observe minimum widths depending on the design!

Legend

①	Ordering width
B/C	Dimension from the outer edge of the awning up to the centre of the arm bearing
E/F	Dimension from the outer edge of the awning to the middle of the arm bearing (with 3-arm units always seen from the drive side, with 4-arm units as shown)
D/D1/D2	Dimension from the centre of the arm bearing up to the centre of the arm bearing

Folding arm awning – AREIA 7040

Standard dimensions arm bearing position

In one piece with 4 articulated arms

Projection [mm]		Width [mm]									
		to 4400	4401-4650	4651-4900	4900-5150	5151-5400	5401-5650	5651-6000	6001-6500	6501-6750	6751-7000
1500	B/C	$D1_{min}$ = 1865	105	250	400	500	600	600	700	800	900	900
	E	$D2_{min}$ = 980	1090	1250	1390	1500	1600	1750	1850	2000	2200	2300
2000	B/C	$D1_{min}$ = 2365				105	160	250	350	500	700	800
	E	$D2_{min}$ = 1230				1340	1395	1500	1600	1800	2000	2100
2500	B/C	$D1_{min}$ = 2865								105	300	400
	E	$D2_{min}$ = 1480								1590	1800	1900
3000	B/C											
	E											
3500	B/C											
	E											
4000	B/C											
	E											

Legend

optionally available for a surcharge

- Minimum dimensions B/C, if 2 brackets per arm bearing are required:
  - in combination with mounting bracket type A, B, C, I, K, E or G: 200 mm
  - in combination with mounting bracket type F: 335 mm
  - in combination with mounting bracket type D or H: 315 mm

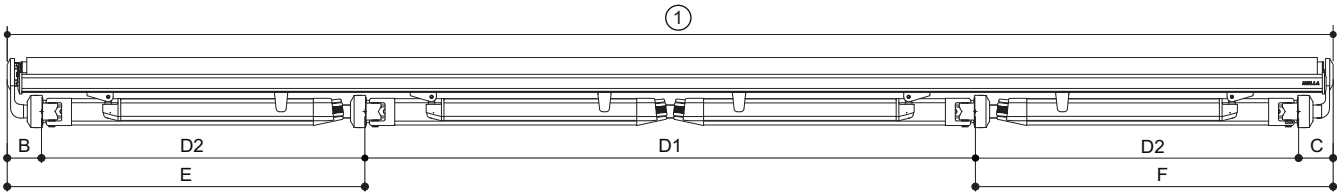

Collision check with drive system on the left side: $D1_{min} \geq FB - E - F$ $D2_{min} \geq E - B$

Collision check with drive system on the right side: $D1_{min} \geq FB - E - F$ $D2_{min} \geq F - C$

Please note: Observe minimum widths depending on the design!

Legend

①	Ordering width
B/C	Dimension from the outer edge of the awning up to the centre of the arm bearing
E/F	Dimension from the outer edge of the awning to the middle of the arm bearing (with 3-arm units always seen from the drive side, with 4-arm units as shown)
D/D1/D2	Dimension from the centre of the arm bearing up to the centre of the arm bearing

Attention:

By default, the unit is symmetric B = C and E = F. The B- C- E- and F-dimension can be changed for asymmetric applications (e.g. with rafters) by +/-200 mm each.
Condition 1: Arm bearing dimension B and C min. 105 mm/max.1200 mm (see table standard dimensions arm bearing positions)
Condition 2: Collision check of the arms
Condition 3: Collision check between arm bearing/ cover support and LED control unit
This deviation must always be indicated in the order by means of a sketch.

- Mount the brackets with a max. distance of 400 mm to the arm bearing.
- Dimension from the outer edge of the awning up to the middle 1. Bracket max. 1100 mm.

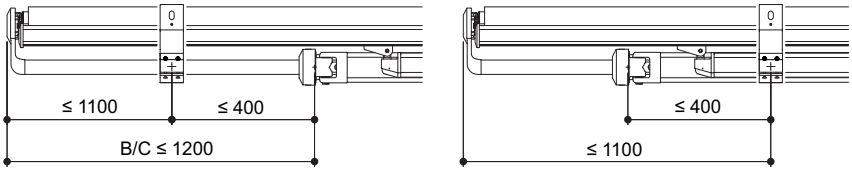

Attention:

As soon as two brackets are defined per arm bearing, these should be installed to the left and right of the arm bearing!

Folding arm awning – VIVA 7040





Optional central tilt adjustment.

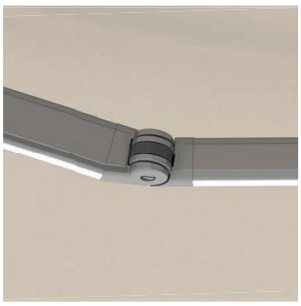

Folding arm with hidden, high-strength pull tape, optionally available with integrated LED lighting.



Varioplus roller blind integrated in the extension tube, as additional sun and view protection.

Limit sizes

Awning

Min./max. dimensions with sloping projection [mm]	1500	2000	2500	3000	3500	4000
Single unit						
Maximum width	7000	7000	7000	7000	7000	7000
Number of articulated arms up to 6500 mm width	2	2	2	2	2	2
Number of articulated arms with 6501 - 7000 mm width	3	3	3	3	3	3
Minimum width - maxima version	1490	1740	1990	2240	2490	2740
Central inclination adjustment with crank handle drive or motor with hand-held radio transmitter from 0°-40°	7000	7000	7000	7000	4709	-
Minimum width with crank	2070	2570	3070	3570	4070	
Minimum width with motor (2 arms)	1980	2480	2980	3480	3980	4670
Minimum width with motor (3 arms)	2940	3690	4440	5190	5940	6970
Minimum width with motor (4 arms)	3900	4900	5900	6900	-	-
paired unit						
Maximum width	14000	14000	14000	14000	14000	14000
Number of articulated arms up to 12000 mm width	4	4	4	4	4	4
Number of articulated arms with 13840 - 14000 mm width	6	6	6	6	6	6
Minimum width with motor (4 arms)	4040	5040	6040	7040	8040	9340
Minimum width with motor (6 arms)	5950	7450	8950	10450	11950	13940

Attention:

Single units with 3 and 4 articulated arms or a sloping projection of 4000 mm and paired units are only possible with a motor.

Cover

Single unit	Acrylic fabric	Acrylic All-weather	324 Firemaster*	Polyester fabric - PVC-free	Polyester fabric - PVC coated*
Maximum width [mm]	7000	7000	7000	7000	4000
Maximum projection [mm]	4000	3500	3000	4000	3500

* The 324 Firemaster and Polyester fabric - PVC coated covers are not compatible with linked units.

Types of installation

Wall installation

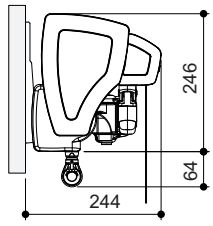

Ceiling installation

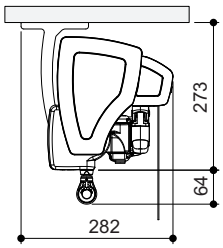

Rafter installation

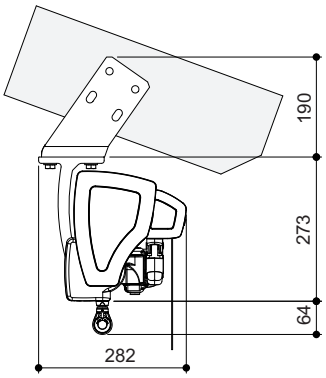

Option - Varioplus roller blind (VP)

Wall installation

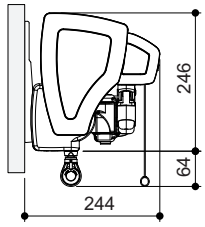

Ceiling installation

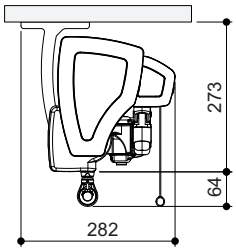

Rafter installation

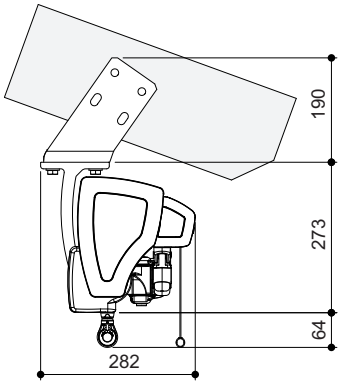

Integrated in the extension tube, as additional sun and view protection.
Operation via special gear with crank rod, radio motor or motor with switch operation.

Varioplus roller blind - maximum height of roller blind [mm]

	Acrylic fabric	Acrylic All-weather	Polyester fabric - PVC-free	Polyester fabric - PVC coated
Crank drive	1900	1900	1900	2500
Motor drive	1000	1000	1000	1500

The cover width equals the awning cover. Tolerance of variations in length acc. to EN 13561.

Scope of delivery

- VIVA folding arm awning with freely selectable frame color from the HELLA color range
- Large selection of sewn acrylic and polyester awning fabrics
- Motor drive for switch operation
- Wall bracket for mounting on concrete (C20/C25) or metal incl. design for brackets on alternative mounting surface and mounting types
- When the unit is retracted the cover is protected by the roof profile
- Valance with edging strips
- Folding arm with hidden glass traction system
- Inclination adjustment 0° - 40°

Supplementary equipment

- Linked up to a width of 14 m
- Brackets for wall, ceiling or rafter mounting
- Cloths made of Allwetter, recycled polyester and SOLTIS
- bonded and UltraSeam fabrics
- Operation with crank and radio motor
- Sensors for wind, sun and precipitation
- Central inclination adjustment by means of crank drive or motor with hand-held radio transmitter from 0° - 40° to 3500 mm drop (observe maximum widths)
- Sleeve design for even better protection when retracted
- Arm covering profile
- Varioplus roller blind for low sun and protection from unwanted glances
- LED lighting in the articulated arms for a pleasant ambience
- Infrared radiant heater

Benefits of the product

- Heat protection
- Glare protection
- Sight screen
- Protection against UV radiation
- High-quality construction elements guarantee a long lifespan and convenient operation
- Large color selection for color coordination with the façade
- Simple tilt adjustment

Folding arm awning – VIVA 7040

Brackets

Wall bracket Type A

Art. no. 034705V1

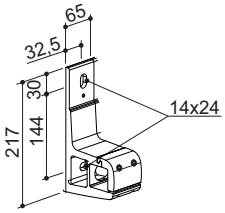

Wall bracket type B

Art. no. 03470534

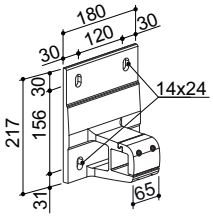

Wall bracket type C

Art. no. 034705U5

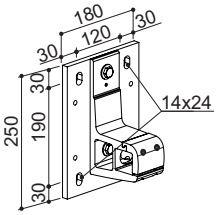

Wall bracket type D

Art. no. 034705U7

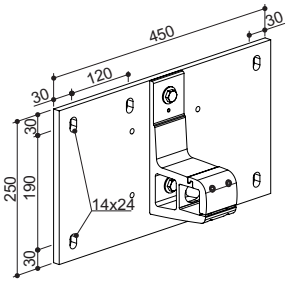

Ceiling bracket Type E

Art. no. 034705U2

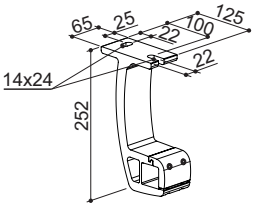

Ceiling bracket type F

Art. no. 034705U4

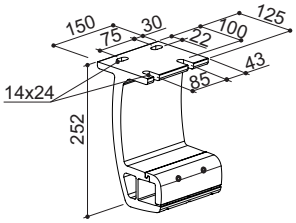

Ceiling bracket type G

Art. no. 034705U6

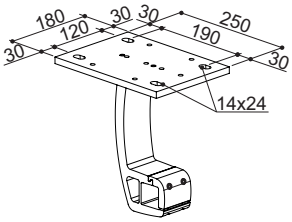

Ceiling bracket type H

Art. no. 034705U8

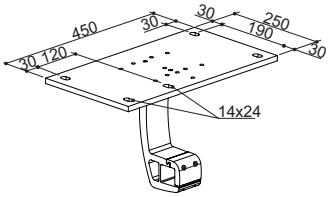

Wall bracket type I
Ceiling face

Art. no. 034705V3

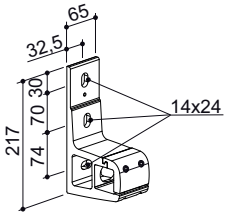

Rafter bracket type K on the left side

Art. no. 034705U9

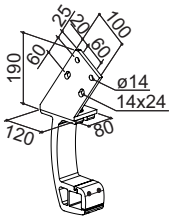

Weight in kg depending on the width and the sloping projection

Width [mm]	1500	2000	2500	3000	3500	4000	Varioplus	Arm covering	VIVA super
	Projection [mm]						Additional weights		
1500	34						3	1	2
2000	39	41	43				4	2	2
2500	43	46	48	52	55		5	2	3
3000	48	50	52	57	60	63	6	3	3
3500	52	55	56	62	65	68	6	3	4
4000	57	60	62	66	70	72	7	3	5
4500	61	64	66	71	75	77	8	4	5
5000	66	69	71	76	79	82	9	4	6
5500	70	73	76	81	84	87	9	5	6
6000	75	78	80	85	89	92	10	5	7
6500	79	83	85	90	94	97	11	5	7
7000	92	96	100	107	112	116	12	6	8

Extra weights [kg]

additional folding arm	8
LED lighting	2
Central inclination adjustment with crank handle	3
Central inclination adjustment VarioTronic	8

Legend

	Weight [kg] with 2 folding arms
	Weight [kg] with 3 folding arms

Definition maximum sloping projection (with inclination 15°)

Horizontal projection ①	1500	2000	2500	3000	3500	4000
x	1680	2160	2635	3110	3590	4080

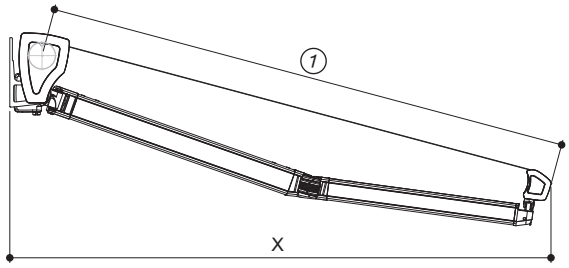

Folding arm awning – VIVA 7040

Standard dimensions arm bearing position

In one piece with 2 folding arms

Projection [mm]		to 1899	1900-2199	2200-2699	2700-3199	3200-3699	3700-4209	4210-4709	4710-5209	5210-5469	5470-5999	6000-6099	6100-6500
		Width [mm]											
1500	B/C	110	300 *	195	400	500	700	700	800	900	900	1000	1000
	D_{min}	1270	1810										
2000	B/C	110	200	300 *	195	400	500	700	800	900	900	1000	1000
	D_{min}	1520		2310									
2500	B/C		110	200	400 *	195	400	500	700	900	900	1000	1000
	D_{min}		1770		2810								
3000	B/C			110	200	400 *	195	400	500	700	900	1000	1000
	D_{min}			2020		3310							
3500	B/C			110	200	400	500 *	195 [1]	300 [2]	500 [2]	700 [2]	900 [2]	1000 [2]
	D_{min}			2270			3810 [1]		3940 [2]				
4000	B/C				110	200	400	500 110	700 130	300	400	700	700
	D_{min}				2520			4450					

Legend

	maxima design
*	B = C = (awning width-D)/2 The dimensions given for B/C apply for 2 folding arms with motor drive.
[1]	Sloping projection 3500 mm with Variomatic
[2]	Sloping projection 3500 mm with tilting arm bearing

Notes:

- **The maxima design is always provided with tilting arm bearing.**
- Lower articulated arm always on the drive side.

Minimum dimensions B/C if designed as single unit with crank handle:

- with standard design with projection: 1500 mm to 3500 mm: 130 mm (with Variomatic)
- with standard design with projection: 3500 mm and 4000 mm: 155 mm (with tilting arm bearing)
- with maxima design: 130 mm

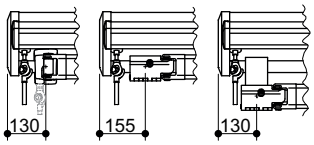

Minimum dimensions B/C, if 2 brackets per arm bearing are required:

- in combination with mounting bracket type A, B, C, I, K, E or G: 200 mm
- in combination with mounting bracket type F: 275 mm
- in combination with mounting bracket type D or H: 315 mm

Design maxima

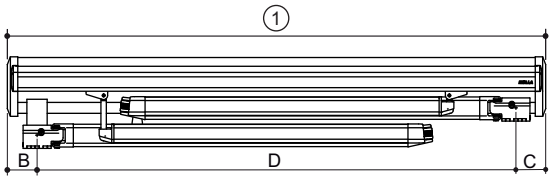

Version with Variomatic

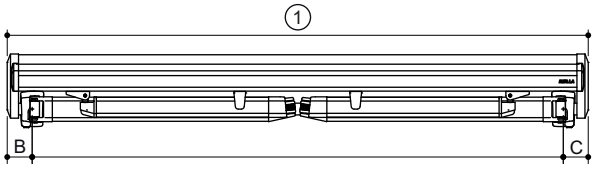

Version with tilting arm bearing

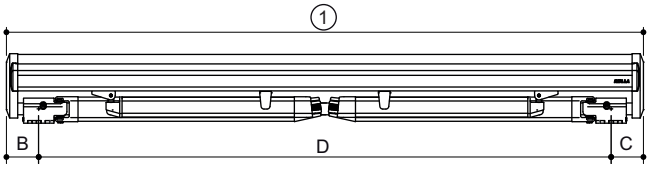

Collision check: $D_{min} \geq FB - B - C$

Please note: Observe minimum widths depending on the design!

Legend

①	Ordering width
B	Dimension from the left outer edge of the awning up to the centre of the arm bearing
C	Dimension from the right outer edge of the awning up to the centre of the arm bearing
D/D1/D2	Dimension from the centre of the arm bearing up to the centre of the arm bearing
E/F	Dimension from the outer edge of the awning to the middle of the arm bearing (with 3-arm units always seen from the drive side, with 4-arm units as shown)

In one piece with 3 folding arms

Projection [mm]		Width [mm]													
		2700-3199	3200-3699	3700-4209	4210-4709	4710-5209	5210-5469	5470-5999	6000-6099	6100-6500	6501-6600	6601-6699	6700-6799	6800-6899	6900-7000
1500	B/C	$D1_{min}$=1810	85	160	400	600	800	800	800	900	900	600	800	800	800	800
	E	$D2_{min}$ = 950	1900	2000	2300	2600	2700	2800	3200	3400	3500	3500	3500	3500	3600	3600
2000	B/C	$D1_{min}$ = 2310		85	85	200	400	600	700	900	900	600	800	800	800	800
	E	$D2_{min}$ = 1200		2400	2400	2600	2800	3000	3200	3300	3500	3500	3500	3500	3600	3600
2500	B/C	$D1_{min}$ = 2810				85	160	200	300	400	500	600	600	700	700	700
	E	$D2_{min}$ = 1450				2900	3000	3100	3200	3300	3500	3500	3500	3600	3600	3600
3000	B/C	$D1_{min}$ = 3310					85	85	160	200	200	300	300	300	300	300
	E	$D2_{min}$ = 1700					3400	3400	3500	3600	3600	3700	3700	3700	3700	3700
3500	B/C	[1] $D1_{min}$ = 3810				[2] $D1_{min}$ = 3940			85 [1]	85 [1]	160 [1]	200 [2]	200 [2]	200 [2]	200 [2]	200 [2]
	E	$D2_{min}$ = 1950				$D2_{min}$ = 2050			3900 [1]	3900 [1]	3980 [1]	4200 [2]	4200 [2]	4200 [2]	4200 [2]	4200 [2]
4000	B/C							$D1_{min}$ = 4450								110
	E							$D2_{min}$ = 2290								4560

Legend

	optionally available for a surcharge
[1]	Sloping projection 3500 mm with Variomatic
[2]	Sloping projection 3500 mm with tilting arm bearing

Minimum dimensions B/C, if 2 brackets per arm bearing are required:

- in combination with mounting bracket type A, B, C, I, K, E or G: 200 mm
- in combination with mounting bracket type F: 275 mm
- in combination with mounting bracket type D or H: 315 mm

Version with Variomatic

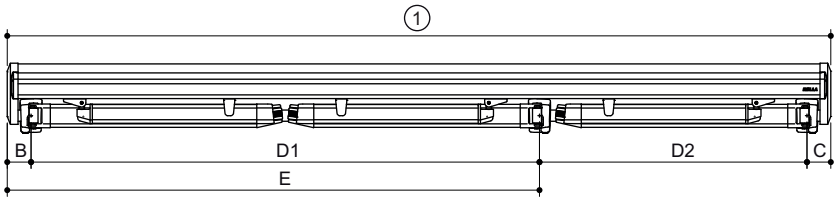

Version with tilting arm bearing

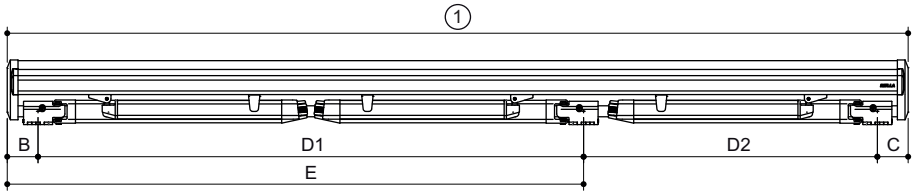

Collision check with drive system on the left side:	$D1_{min} \geq E - B$	$D2_{min} \geq FB - C - E$
Collision check with drive system on the right side:	$D1_{min} \geq E - C$	$D2_{min} \geq FB - B - E$

Please note: Observe minimum widths depending on the design!

Legend

①	Ordering width
B	Dimension from the left outer edge of the awning up to the centre of the arm bearing
C	Dimension from the right outer edge of the awning up to the centre of the arm bearing
D/D1/D2	Dimension from the centre of the arm bearing up to the centre of the arm bearing
E/F	Dimension from the outer edge of the awning to the middle of the arm bearing (with 3-arm units always seen from the drive side, with 4-arm units as shown)

Folding arm awning – VIVA 7040

Standard dimensions arm bearing position

In one piece with 4 folding arms

Projection [mm]		3700-4209	4210-4709	4710-5209	5210-5469	5470-5999	6000-6099	6100-6500	6501-6600	6601-6699	6700-6799	6800-6899	6900-7000
		Width [mm]											
1500	B/C	$D1_{min}$ = 1810	85	195	400	600	700	800	800	800	800	800	1000	1000
	E	$D2_{min}$ = 950	1042	1160	1400	1600	1700	1800	2000	2200	2300	2400	2400	2400
2000	B/C	$D1_{min}$ = 2310			85	195	300	500	500	600	600	700	700	800
	E	$D2_{min}$ = 1200			1292	1430	1550	1800	1800	1900	1900	2000	2000	2100
2500	B/C	$D1_{min}$ = 2810					85	130	130	300	300	400	400	500
	E	$D2_{min}$ = 1450					1542	1590	1600	1800	1800	1900	1900	2000
3000	B/C	$D1_{min}$ = 3310												85
	E	$D2_{min}$ = 1700												1792
3500	B/C													
	E													
4000	B/C													
	E													

Legend

optionally available for a surcharge

Minimum dimensions B/C, if 2 brackets per arm bearing are required:

- in combination with mounting bracket type A, B, C, I, K, E or G: 200 mm
- in combination with mounting bracket type F: 275 mm
- in combination with mounting bracket type D or H: 315 mm

Version with Variomatic

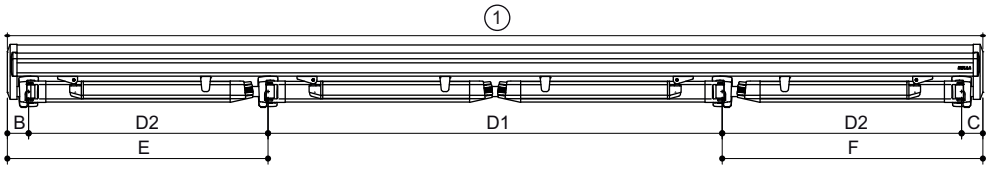

Version with tilting arm bearing

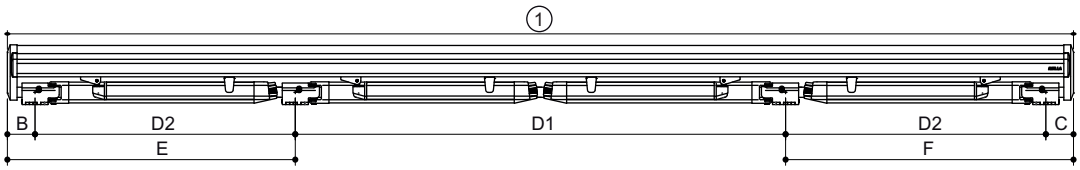

Collision check with drive system on the left side:	$D1_{min} \geq$ FB - E - F	$D2_{min} \geq$ E - B
Collision check with drive system on the right side:	$D1_{min} \geq$ FB - E - F	$D2_{min} \geq$ F - C

Please note: Observe minimum widths depending on the design!

Legend

①	Ordering width
B	Dimension from the left outer edge of the awning up to the centre of the arm bearing
C	Dimension from the right outer edge of the awning up to the centre of the arm bearing
D/D1/D2	Dimension from the centre of the arm bearing up to the centre of the arm bearing
E/F	Dimension from the outer edge of the awning to the middle of the arm bearing (with 3-arm units always seen from the drive side, with 4-arm units as shown)

Attention:

By default, the unit is symmetric B = C and E = F. The B- C- E- and F-dimension can be changed for asymmetric applications (e.g. with rafters) by +/-200 mm each.

Condition 1: Arm bearing dimension B and C min. 85 mm / max. 1200 mm. (see table standard dimensions arm bearing positions)
Condition 2: Collision check of the arms
Condition 3: Collision check between arm bearing/ cover support and LED control unit
This deviation must always be indicated in the order by means of a sketch.

- Mount the brackets with a max. distance of 400 mm to the arm bearing.
- Dimension from the outer edge of the awning up to the middle 1. Bracket max. 1100 mm.

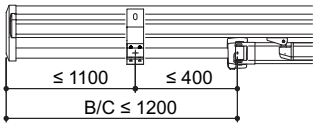

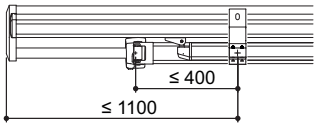

As soon as two brackets are defined per arm bearing, these should be installed to the left and right of the arm bearing!

Cable exits

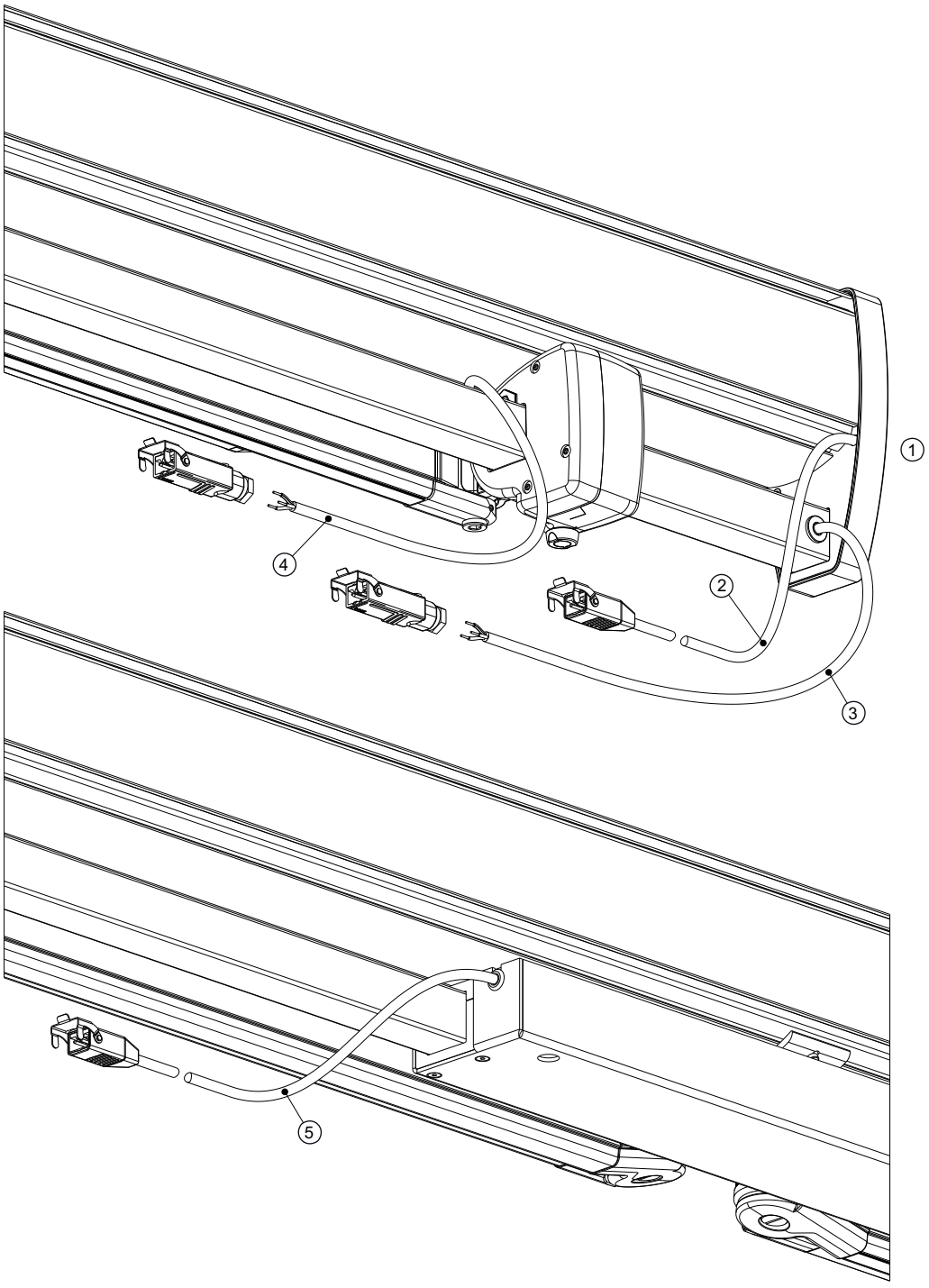

Legend

①	Cable exit towards the rear (standard)
②	230V power cable (motor)
③	230V power cable (LED)
④	230V power cable (Varioplus roller blind)
⑤	230V power cable (Variotronic)

Cassette awning – PAN 7040





Flush wall mounting without visible brackets.

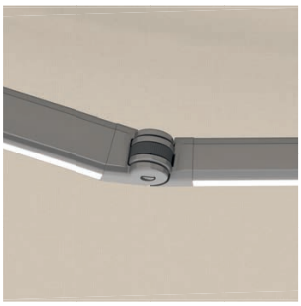

Folding arm with hidden, high-strength pull tape, optionally available with integrated LED lighting.



Stable connection to the front rail.

Limit sizes

Awning

Min./max. dimensions with sloping projection [mm]	1500	2000	2500	3000	3500	4000
Single unit						
Maximum width	7000	7000	7000	7000	7000	7000
Number of articulated arms up to 6000 mm width	2	2	2	2	2	2
Number of articulated arms with 6001 - 6219 width	3	3	3	3	2	-
Number of articulated arms with 6220 - 6969 mm width	3	3	3	3	3	-
Number of articulated arms with 6970 - 7000 mm width	3	3	3	3	3	3
Minimum width with motor (2 arms)	2170	2670	3170	3670	4170	4670
Minimum width with motor (3 arms)	3200	3950	4700	5470	6220	6970
Minimum width with motor (4 arms)	4230	5250	6250	-	-	-
Minimum width with NHK motor (2 arms)	2220	2720	3220	3720	4220	4720
Minimum width with NHK motor (3 arms)	3250	4000	4750	5520	6270	-
Minimum width with NHK motor (4 arms)	4280	5300	6300	-	-	-

Cover

Single unit	Acrylic fabric	Acrylic All-weather	324 Firemaster	Polyester fabric - PVC-free	Polyester fabric - PVC coated
Maximum width [mm]	7000	7000	7000	7000	4000
Maximum sloping projection [mm]	4000	3500	3000	4000	3500

Types of installation

Wall installation

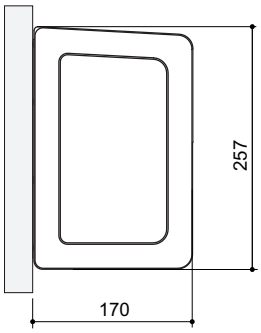

Modular separation (optional)

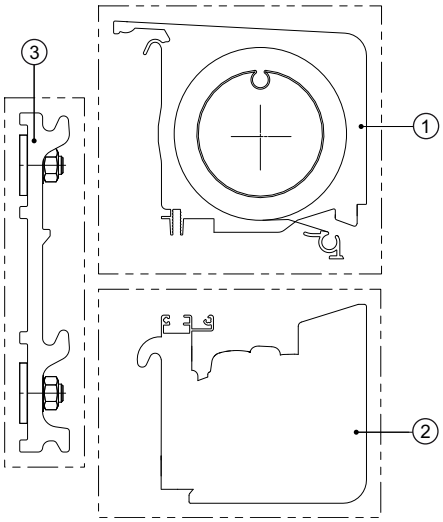

Legend

① Upper modular assembly (box, shaft, cover)
② Lower modular assembly (front rail, folding arms)
③ Brackets and mounting material

Scope of delivery

- PAN 7040 cassette awning with freely selectable frame color from the HELLA color range
- Large selection of sewn acrylic and polyester awning fabrics
- Motor drive for switch operation
- Wall bracket for mounting on concrete (C20/C25) or metal incl. design for brackets on alternative mounting surface
- Two-part drop profile for better fabric revision
- Folding arm with hidden glass traction system
- Tilt arm bearing with inclination adjustment 5° - 45°

Supplementary equipment

- Cloths made of all-weather, recycled polyester and SOLTIS
- Glued and UltraSeam covers
- Operation via radio motor
- Sensors for wind, sun and precipitation
- Modular design for even easier assembly
- LED lighting for a pleasant ambience
- Infrared radiant heater

Benefits of the product

- Heat protection
- Glare protection
- Sight screen
- Protection from UV radiation
- Design element due to flush wall mounting and invisible brackets
- Due to the full cassette the roller tube and folding arms are protected and not visible
- High-quality construction elements guarantee a long lifespan and convenient operation
- Large color selection for color coordination with the façade

Cassette awning – PAN 7040

Brackets

Wall bracket type B
Art. no. 03650502

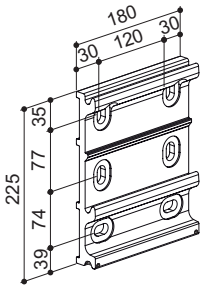

Wall bracket type D
Art. no. 03650503

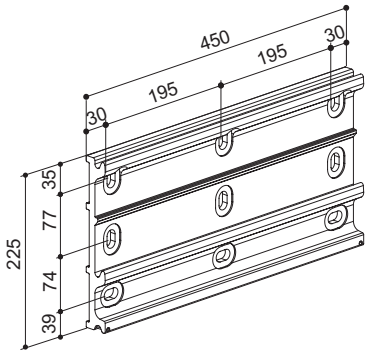

Wall bracket type I
Art. no. 03650505

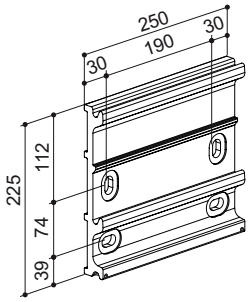

Weight in kg depending on the width and the sloping projection

Width [mm] \ Projection [mm]	1500	2000	2500	3000	3500	4000
2500	48					
3000	54	57				
3500	60	63	65			
4000	66	69	71	76		
4500	72	75	77	82	86	
5000	79	82	84	89	93	95
5500	85	88	90	95	99	102
6000	91	94	97	102	106	108
6219	101	106	109	116	109	
6500	104	109	112	119	124	
7000	110	115	118	125	131	135

Extra weights [kg]

additional folding arm	8
LED lighting	2

Legend

	Weight [kg] with 2 folding arms
	Weight [kg] with 3 folding arms

For larger dimensions we recommend the modular design of the cassette awning PAN 7040.
Thus, the weight indicated would be decreased by more than 50 percent and the installation of the awning could be carried out by two fitters only. This is an advantage, not only for the installation but also for the complete logistics to the site.

Definition maximum sloping projection (with inclination 15°)

Horizontal projection ①	1500	2000	2500	3000	3500	4000
x	1620	2095	2575	3050	3525	4005

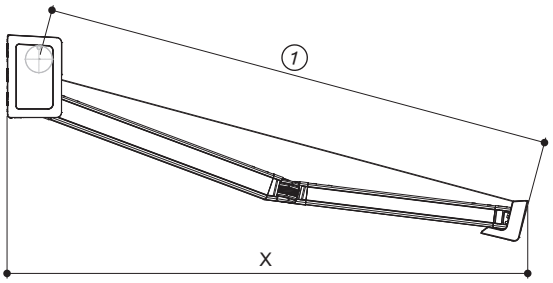

Standard dimensions arm bearing position

In one piece with 2 folding arms (standard)

Projection [mm]			to 2500	2501 - 3000	3001 - 3500	3501 - 4000	4001 - 4500	4501 - 4750	4751 - 5000	5001 - 5250	5251 - 5500	5501 - 5750	5751 - 6000	6001 - 6219
			Width [mm]											
1500	B/C	D_{min} = 1950	110*	275	500	600	700	800	800	900	900	1000	1000	1100
	E	D_{min} = 1970**												
2000	B/C	D_{min} = 2450		110*	275	500	700	800	800	900	900	1000	1000	1100
	E	D_{min} = 2470*												
2500	B/C	D_{min} = 2950			110*	275	500	600	600	700	700	1000	1000	1100
	E	D_{min} = 2970**												
3000	B/C	D_{min} = 3450				110*	275	500	500	700	700	1000	1000	1100
	E	D_{min} = 3470**												
3500	B/C	D_{min} = 3950					110*	275	275	500	500	700	700	1000
	E	D_{min} = 3970**												
4000	B/C	D_{min} = 4450						110*	150	265	390	515	640	
	E	D_{min} = 4470**												

* Minimum dimension (with NHK on the drive side: 160 mm)

** with complete width > 5000 mm

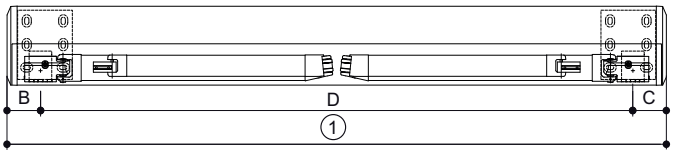

Collision check: $D_{min} \geq FB - B - C$

Please note: Observe minimum widths depending on the design!

Legend

①	Ordering width
B	Dimension from the left outer edge of the end cap up to the centre of the arm bearing
C	Dimension from the right outer edge of the end cap up to the centre of the arm bearing
E/F	Dimension from the outer edge of the end cap to the middle of the arm bearing (with 3-arm units always seen from the drive side, with 4-arm units as shown)
D/D1/D2	Dimension from the centre of the arm bearing up to the centre of the arm bearing

Note:
The brackets may not protrude over the awning. The minimum distance (5) from the complete width to the outer edge of the bracket is 60 mm. Therefore the wall bracket type B is installed off centre up to a B/C dimension of 150 mm. For the wall bracket type D, this applies to a B/C dimension of 300 mm.

Divergence of the brackets to the arm bearing: max: +/-50 mm possible for bracket type B (with type D max. +/-175 mm)

Please note:
By default, the unit is symmetric B = C and E = F. The B- C- E- and F-dimension can be changed for asymmetric applications by +/-200 mm each (not for a unit with a sloping projection of 4000 mm with 2 folding arms).
Condition 1: Arm bearing dimension B and C min. 110 mm / max. 1100 mm.
Condition 2: Collision check of the arms
This deviation must always be indicated in the order by means of a sketch.

Cassette awning – PAN 7040

Standard dimensions arm bearing position

In one piece with 3 folding arms

Projection [mm]		Width [mm]										
		to 2500	2501-3000	3001-3500	3501-4000	4001-4500	4501-5000	5001-5500	5501-6000	6001-6250	6251-6500	6501-6750	6751-7000
1500	B/C	$D1_{min}$ = 1950		110*	200	300	500	600	800	1000	1000	1000	1000
	E	$D2_{min}$ = 1030		2060*	2150	2250	2450	2550	2750	2950	2950	2950	2950
2000	B/C	$D1_{min}$ = 2450			110*	110*	300	400	700	900	1000	1000	1000
	E	$D2_{min}$ = 1280			2560*	2560*	2750	2850	3150	3350	3450	3450	3450
2500	B/C	$D1_{min}$ = 2950					110*	200	300	600	700	800	900
	E	$D2_{min}$ = 1530					3060*	3150	3250	3550	3650	3750	3850
3000	B/C	$D1_{min}$ = 3450						110*	110*	110*	110*	110*	110*
	E	$D2_{min}$ = 1800						3560*	3560*	3560*	3560*	3560*	3560*
3500	B/C	$D1_{min}$ = 3950								110*	110*	110*	110*
	E	$D2_{min}$ = 2050								4060*	4060*	4060*	4060*
4000	B/C	$D1_{min}$ = 4450											110*
	E	$D2_{min}$ = 2300											4560*

Legend

optionally available for a surcharge

* Minimum dimension (with NHK on the drive side: 160 mm)

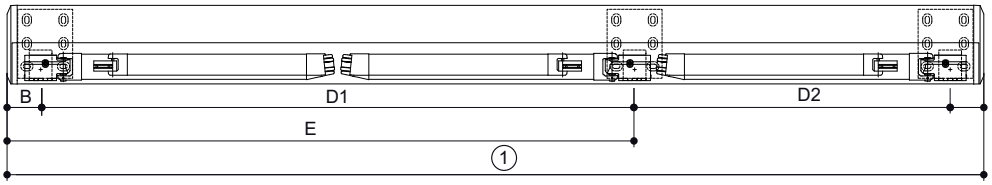

Collision check with drive system on the left side: $D1_{min} \geq E - B$ $D2_{min} \geq FB - C - E$

Collision check with drive system on the right side: $D1_{min} \geq E - C$ $D2_{min} \geq FB - B - E$

Please note: Observe minimum widths depending on the design!

Legend

①	Ordering width
B	Dimension from the left outer edge of the end cap up to the centre of the arm bearing
C	Dimension from the right outer edge of the end cap up to the centre of the arm bearing
E/F	Dimension from the outer edge of the end cap to the middle of the arm bearing (with 3-arm units always seen from the drive side, with 4-arm units as shown)
D/D1/D2	Dimension from the centre of the arm bearing up to the centre of the arm bearing

Note:
The brackets may not protrude over the awning. The minimum distance (5) from the complete width to the outer edge of the bracket is 60 mm. Therefore the wall bracket type B is installed off centre up to a B/C dimension of 150 mm. For the wall bracket type D, this applies to a B/C dimension of 300 mm.

Divergence of the brackets to the arm bearing: max: +/-50 mm possible for bracket type B (with type D max. +/-175 mm)

Please note:
By default, the unit is symmetric B = C and E = F. The B- C- E- and F-dimension can be changed for asymmetric applications by +/-200 mm each (not for a unit with a sloping projection of 4000 mm with 2 folding arms).
Condition 1: Arm bearing dimension B and C min. 110 mm / max. 1100 mm.
Condition 2: Collision check of the arms
This deviation must always be indicated in the order by means of a sketch.

In one piece with 4 folding arms

Projection [mm]		to 2500	2501-3000	3001-3500	3501-4000	4001-4500	4501-5000	5001-5500	5501-6000	6001-6250	6251-6500	6501-6750	6751-7000
		Width [mm]											
1500	B/C	$D1_{min}$ = 1950				110*	200	400	600	800	900	1000	1000
	E	$D2_{min}$ = 1030				1140*	1230	1430	1630	1830	1930	2030	2030
2000	B/C	$D1_{min}$ = 2450						110*	160	400	600	700	800
	E	$D2_{min}$ = 1280						1394*	1444	1684	1884	1984	2084
2500	B/C	$D1_{min}$ = 2950								110*	110*	200	350
	E	$D2_{min}$ = 1530								1644*	1644*	1734	1884
3000	B/C												
	E												
3500	B/C												
	E												
4000	B/C												
	E												

Legend

optionally available for a surcharge

* Minimum dimension (with NHK on the drive side: 160 mm)

* ... for design with emergency crank handle +50 mm (also observe the minimum widths for designs with emergency crank handle)

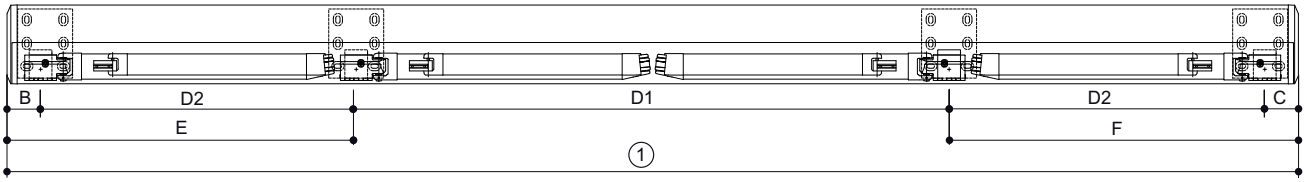

Collision check with drive system on the left side: $D1_{min} \geq FB - E - F$ $D2_{min} \geq E - B$

Collision check with drive system on the right side: $D1_{min} \geq FB - E - F$ $D2_{min} \geq F - C$

Please note: Observe minimum widths depending on the design!

Legend

①	Ordering width
B	Dimension from the left outer edge of the end cap up to the centre of the arm bearing
C	Dimension from the right outer edge of the end cap up to the centre of the arm bearing
E/F	Dimension from the outer edge of the end cap to the middle of the arm bearing (with 3-arm units always seen from the drive side, with 4-arm units as shown)
D/D1/D2	Dimension from the centre of the arm bearing up to the centre of the arm bearing

Note:
The brackets may not protrude over the awning. The minimum distance (5) from the complete width to the outer edge of the bracket is 60 mm. Therefore the wall bracket type B is installed off centre up to a B/C dimension of 150 mm. For the wall bracket type D, this applies to a B/C dimension of 300 mm.

Divergence of the brackets to the arm bearing: max: +/-50 mm possible for bracket type B (with type D max. +/-175 mm)

Please note:
By default, the unit is symmetric B = C and E = F. The B- C- E- and F-dimension can be changed for asymmetric applications by +/-200 mm each (not for a unit with a sloping projection of 4000 mm with 2 folding arms).
Condition 1: Arm bearing dimension B and C min. 110 mm / max. 1100 mm.
Condition 2: Collision check of the arms
This deviation must always be indicated in the order by means of a sketch.

Cassette awning – PAN 7040

Standard dimensions arm bearing position

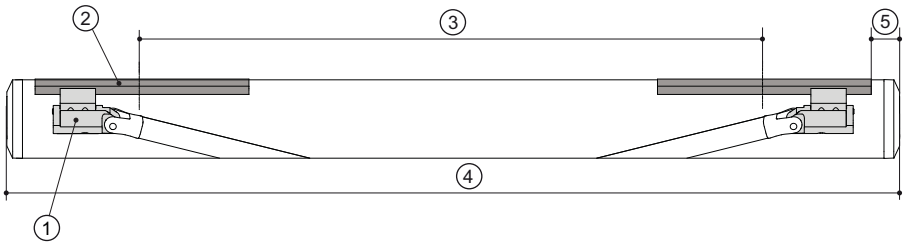

Legend

① Arm bearing
② Wall bracket type D
③ Distance between the fixing brackets
④ Complete width
⑤ Minimum distance of 60 mm for NHK 100 mm (drive-side)
Observe the minimum dimension for B/C with NHK on the drive side

Note:
The brackets may not protrude over the awning. The minimum distance (5) from the complete width to the outer edge of the bracket is 60 mm. Therefore the wall bracket type B is installed off centre up to a B/C dimension of 150 mm. For the wall bracket type D, this applies to a B/C dimension of 300 mm.

Divergence of the brackets to the arm bearing: max: +/-50 mm possible for bracket type B (with type D max. +/-175 mm)

Please note:
By default, the unit is symmetric B = C and E = F. The B- C- E- and F-dimension can be changed for asymmetric applications by +/-200 mm each (not for a unit with a sloping projection of 4000 mm with 2 folding arms).
Condition 1: Arm bearing dimension B and C min. 110 mm / max. 1100 mm.
Condition 2: Collision check of the arms
This deviation must always be indicated in the order by means of a sketch.

Installation in recess

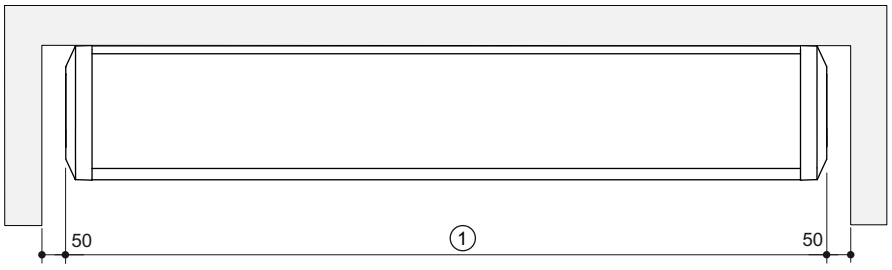

Legend

① Ordering width

Cable exits

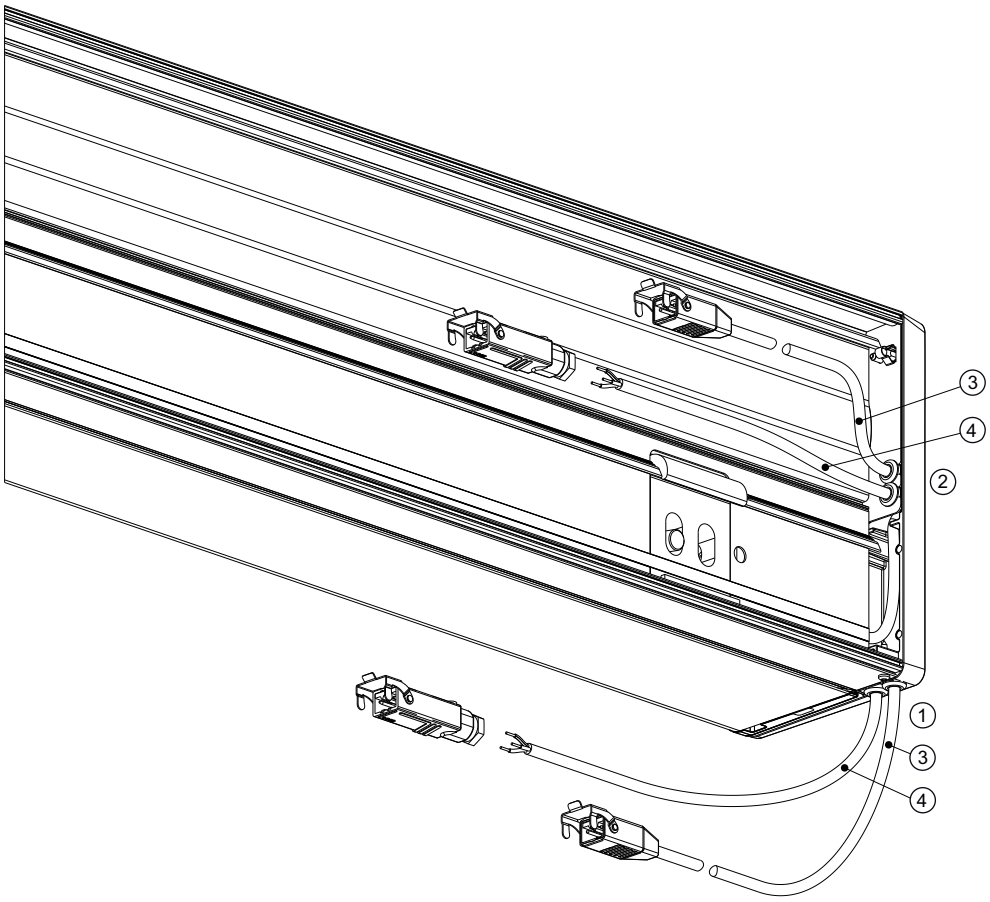

Legend

① Cable exit towards the bottom (standard)
② Cable exit towards the rear
③ 230V power cable (motor)
④ 230V power cable (LED)

Cassette awning – CLEO 5530



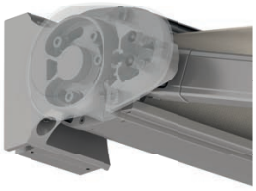

Large inclination range
- Wall installation 5° - 65°
- Installation to the ceiling 5° - 80°

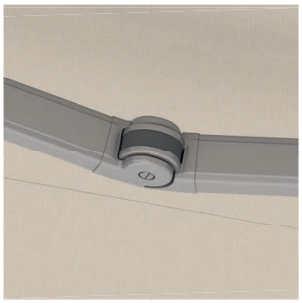

Visually reduced, stable articulated arm with concealed high-strength pull tape.



Fusion of arm bearing and mounting bracket result in optimal stability of the awning.

Limit sizes

Awning

Limit sizes with sloping projection [mm]	1500	2000	2500	3000
Single unit				
Maximum width	5500	5500	5500	5500
Number of folding arms	2	2	2	2
Minimum width	1930	2430	2930	3430

Cover

Single unit	Acrylic fabric	324 Firemaster	Polyester fabric - PVC-free	Polyester fabric - PVC coated
Maximum width [mm]	5500	4000	5500	4000
Maximum sloping projection [mm]	3000	3000	3000	3000

Types of installation

Wall installation

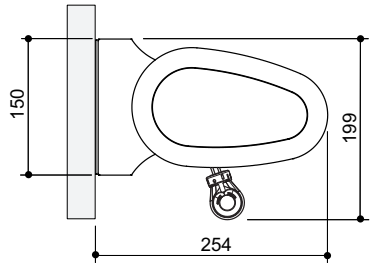

Ceiling installation

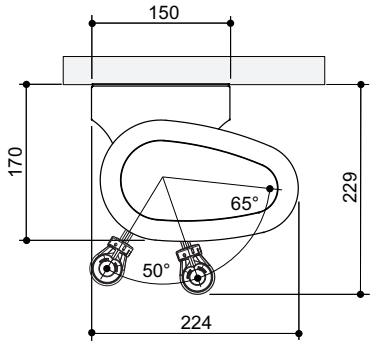

Rafter installation

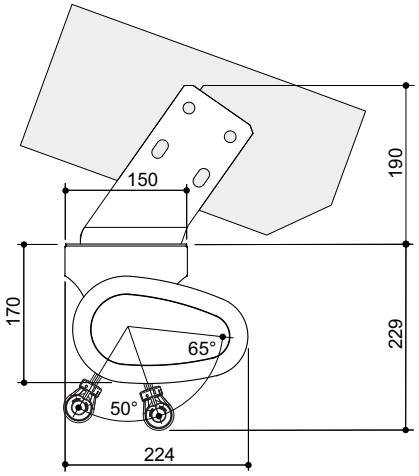

Scope of delivery

- CLEO 5530 cassette awning with freely selectable frame color from the HELLA Color worlds
- Large selection of sewn acrylic and polyester awning fabrics
- Motor drive for switch operation
- Wall bracket for mounting on concrete (C20/C25) or metal including design for brackets on alternative installation base and alternative mounting types
- Articulated arm with concealed pull system
- Inclination adjustment with wall installation 5° - 65°
- Inclination adjustment with ceiling installation 5° - 80°

Supplementary equipment

- Brackets for wall, ceiling or rafter mounting
- Cloths made of recycled polyester and SOLTIS
- bonded and UltraSeam fabrics
- Operation with crank and wireless motor
- Sensors for wind, sun and precipitation
- Infrared radiant heater

Benefits of the product

- Heat protection
- Glare protection
- Privacy
- Protection against UV radiation
- Very slim and inconspicuous design element
- Due to the full cassette the roller tube and articulated arms are protected and not visible
- High-quality construction elements guarantee a long lifespan and convenient operation
- Large color selection for color coordination with the façade
- Large adjustment range in the tilt adjustment

Cassette awning – CLEO 5530

Brackets

Wall/ceiling bracket Type A
Art. no. 03620512

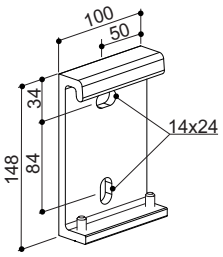

Wall/ceiling bracket Type B
Art. no. 03620513

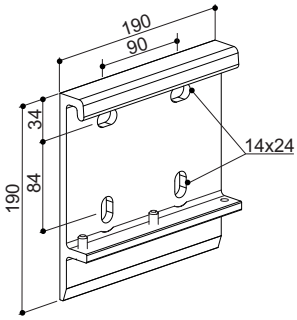

Wall/ceiling bracket Type C
Art. no. 03620514

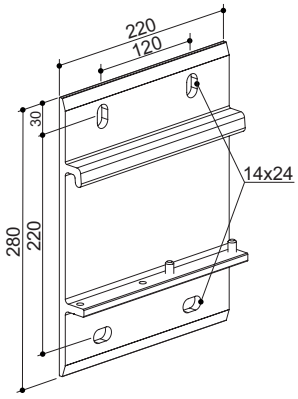

Rafter bracket type K on the left side
Art. no. 03620515

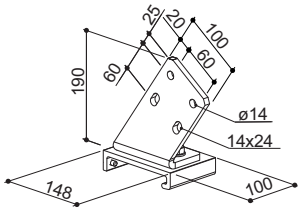

Rafter bracket type K on the right side
Art. no. 03620516

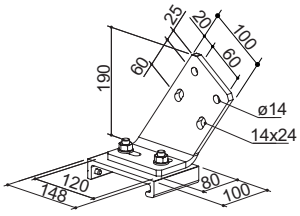

Weight in kg depending on the width and the sloping projection

Width [mm]	Projection [mm]			
	1500	2000	2500	3000
2000	28			
2500	32	34		
3000	36	38	40	
3500	40	43	44	48
4000	44	47	48	52
4500	48	51	53	57
5000	52	55	57	61
5500	57	59	61	65

Legend

Weight [kg] with 2 folding arms

Definition maximum sloping projection (with inclination 15°)

Horizontal projection ①	1500	2000	2500	3000
x	1535	2015	2495	2970

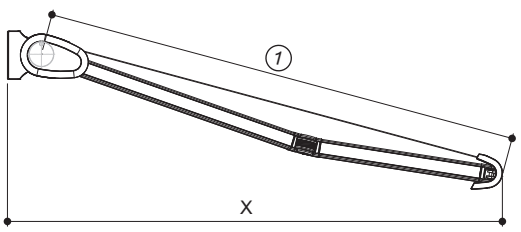

Rafter installation

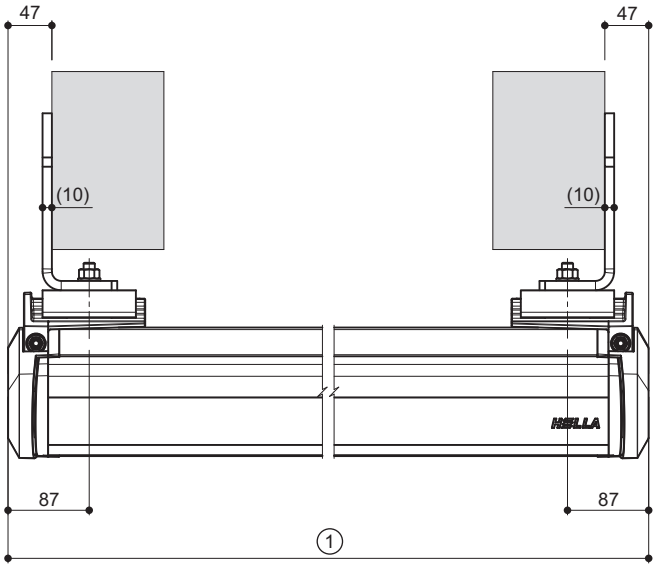

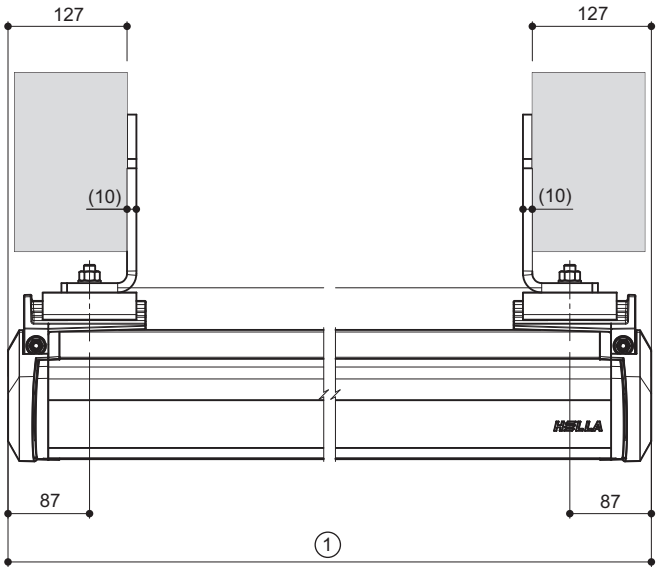

Legend

① Ordering width

Note:

Due to the fixed bracket positions, the width dimension of the CLEO 5530 must adapted to the rafter distances.
Attention: There is a risk that, due to the natural rafter motions, the closing and running behaviour of the awning is affected.

Cassette awning – CLEO 5530

Type: CLEO 5530

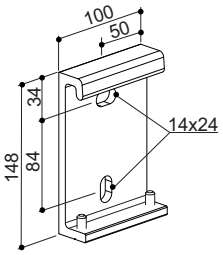

Wall/ceiling bracket type A (standard)
Art. no. 03620512 (2 installation sets)

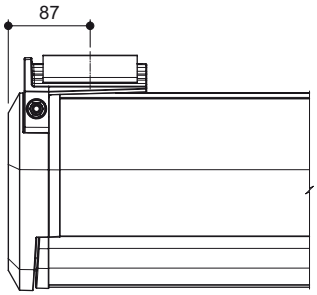

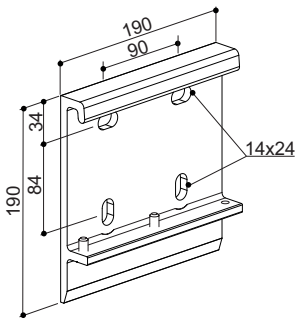

Wall/ceiling bracket type B
Art. no. 03620513 (4 installation sets)

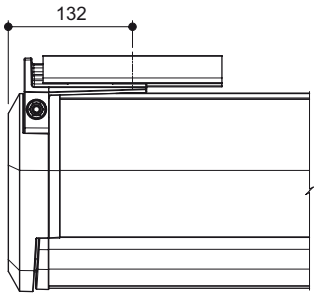

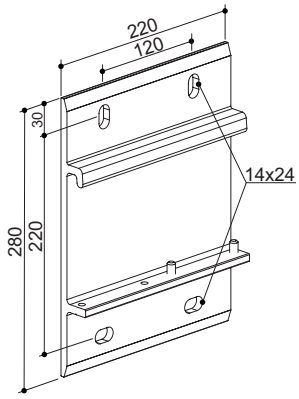

Wall/ceiling bracket type C
Art. no. 03620514(4 installation sets)

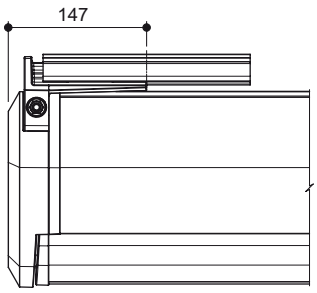

Installation in recess

- To adjust the inclination, it is necessary to remove the end caps. On both sides the required space is at least 50 mm.
- If this requirement cannot be met (ordering width = approximate dimension of the clear opening), the favoured inclination must be adjusted before hinging.

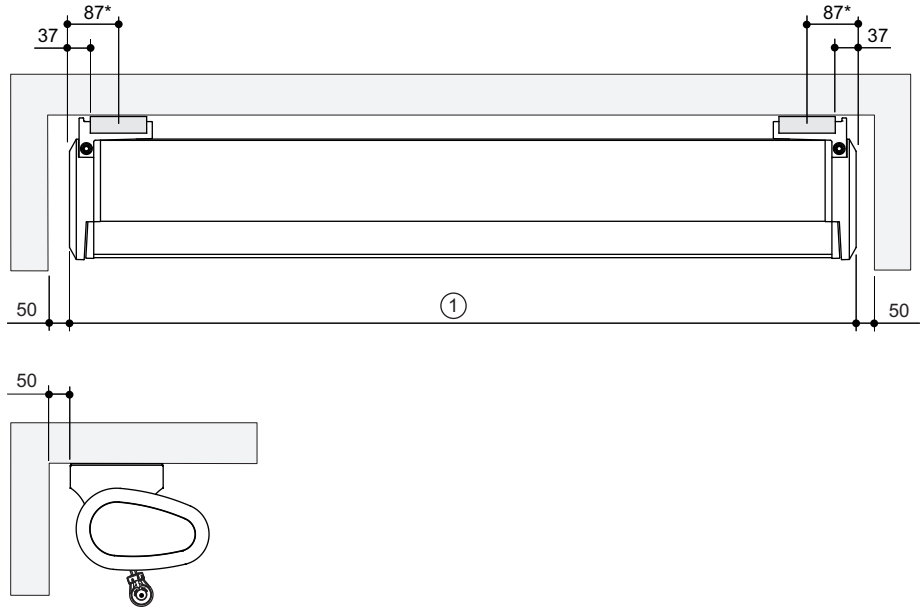

Legend

① Ordering width
* with bracket type A

Cable exits

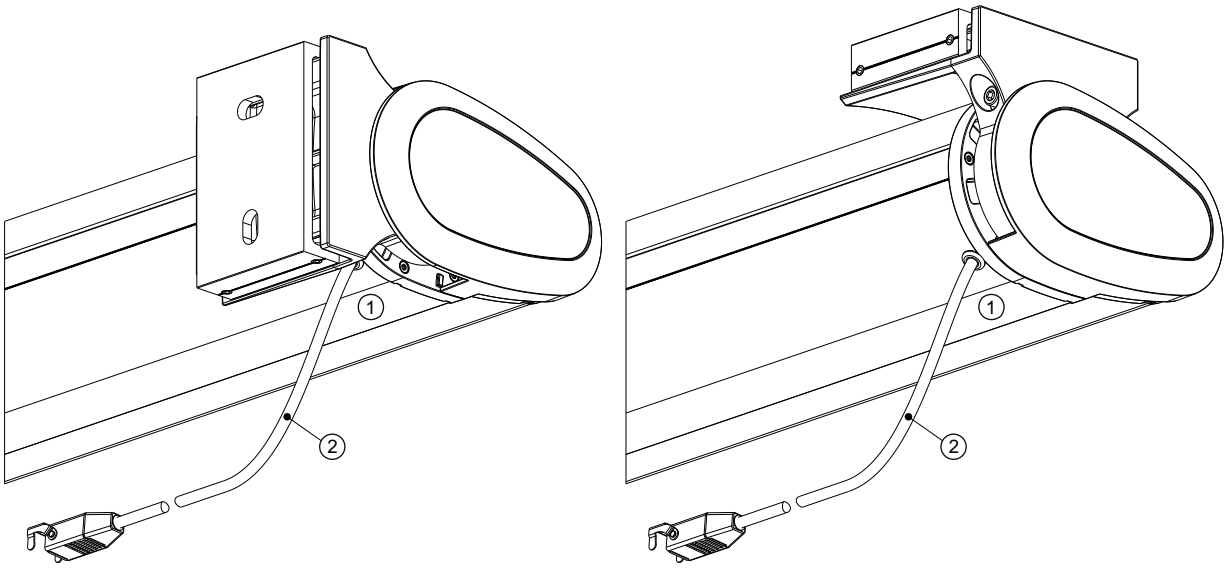

Legend

① Cable exit towards the rear (standard)
② 230V power cable (motor)

Cassette awning – CLEO 7030





High variability in positioning the bracket, especially suitable for rafter mounting.



The small oval cassette surprises with large sizes.

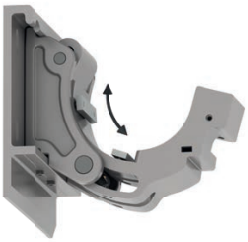

Simple tilt adjustment
- Wall installation 5° - 45°
- Installation to the ceiling 5° - 45°

Limit sizes

Awning

Min./max. dimensions with sloping projection [mm]	1500	2000	2500	3000
Single unit				
Maximum width	7000	7000	7000	7000
Number of articulated arms up to 6000 mm width	2	2	2	2
Number of articulated arms 6001 - 7000 mm width	3	3	3	3
Minimum width with crank	2100	2600	3100	3600
Minimum width with motor (2 arms)	2100	2600	3100	3600
Minimum width with motor (3 arms)	3050	3800	4560	5310
Minimum width with motor (4 arms)	4020	5030	6020	-

Attention:

Single units with 3 and 4 articulated arms are only possible with a motor.

Minimum widths increase by 20 mm for version with emergency crank handle.

Cover

Single unit	Acrylic fabric	324 Firemaster	Polyester fabric - PVC-free	Polyester fabric - PVC coated
Maximum width [mm]	7000	4000	7000	4000
Maximum sloping projection [mm]	3000	3000	3000	3000

Types of installation

Wall installation

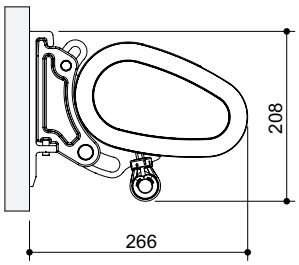

Crank handle output only feasible to the front

Ceiling installation

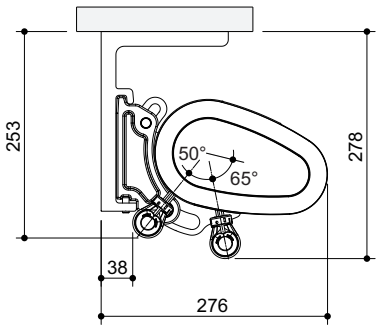

Crank output possible to the front and to the rear; crank output to the rear only possible if arm bearing position B/C is ≥240 mm.

Rafter installation

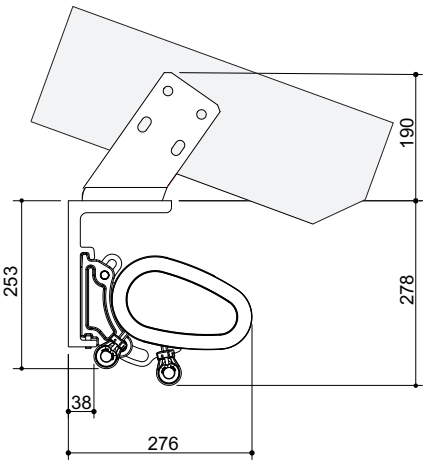

Crank output possible to the front and to the rear; crank output to the rear only possible if arm bearing position B/C is ≥240 mm.

Scope of delivery

- CLEO 7030 cassette awning with freely selectable frame color from the HELLA Color worlds
- Large selection of sewn acrylic and polyester awning fabrics
- Motor drive for switch operation
- Wall bracket for mounting on concrete (C20/C25) or metal including design for brackets on alternative installation base and alternative mounting types
- Articulated arm with concealed pull system
- Inclination adjustment with wall installation 5° - 45°
- Inclination adjustment with ceiling installation 5° - 45°

Supplementary equipment

- Brackets for wall, ceiling or rafter mounting
- Cloths made of recycled polyester and SOLTIS
- bonded and UltraSeam fabrics
- Operation with crank and wireless motor
- Sensors for wind, sun and precipitation
- Infrared radiant heater

Benefits of the product

- Heat protection
- Glare protection
- Privacy
- Protection against UV radiation
- Due to the full cassette the roller tube and articulated arms are protected and not visible
- High-quality construction elements guarantee a long lifespan and convenient operation
- Large color selection for color coordination with the façade
- High variability in bracket positioning especially suitable for rafter mounting

Cassette awning – CLEO 7030

Brackets

Wall bracket type B (standard)
Art. no. 03630505

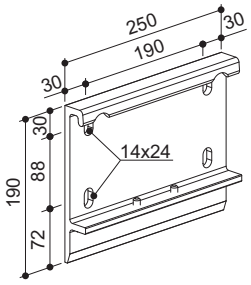

Wall bracket type C
Art. no. 03630506

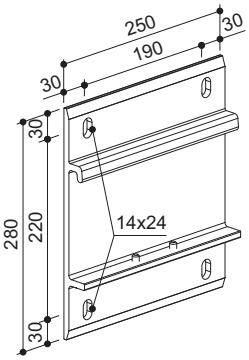

Wall bracket type D
Art. no. 03630507

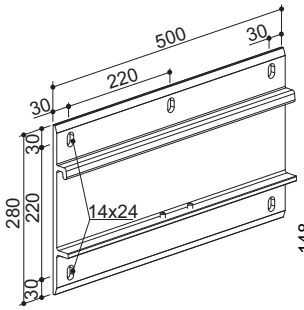

Wall bracket type I
Art. no. 03630526

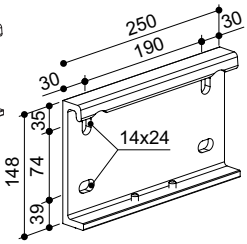

Ceiling bracket Type E
Art. no. 03630511

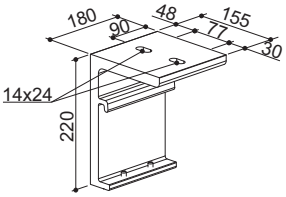

Ceiling bracket type F
Art. no. 03630512

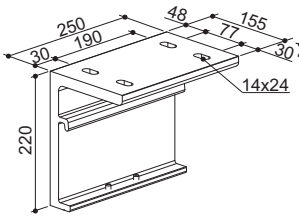

Ceiling bracket type G
Art. no. 03630513

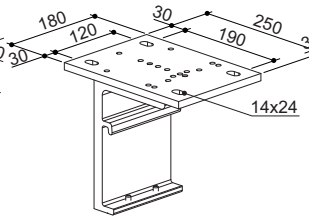

Ceiling bracket type H
Art. no. 03630514

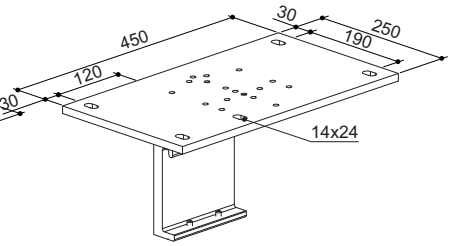

Rafter bracket type K on the left side
Art. no. 03630515

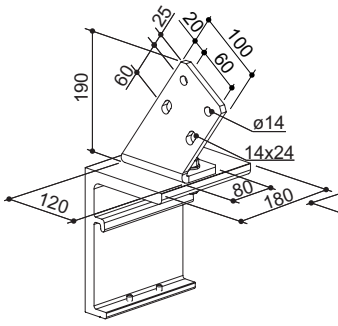

Rafter bracket type K on the right side
Art. no. 03630528

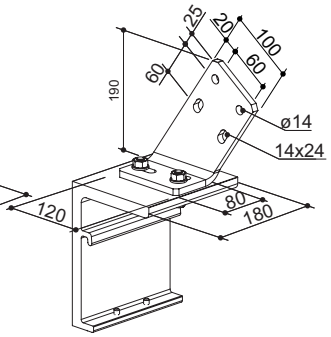

Weight in kg depending on the width and the sloping projection

Width [mm]	Projection [mm] 1500	2000	2500	3000
2500	38			
3000	42	45		
3500	47	49	50	
4000	51	53	55	59
4500	55	57	59	63
5000	59	61	63	67
5500	63	66	67	72
6000	67	70	72	76
6500	77	81	83	90
7000	81	85	88	94

Extra weights [kg]

additional folding arm	8

Legend

	Weight [kg] with 2 folding arms
	Weight [kg] with 3 folding arms

Definition maximum sloping projection (with inclination 15°)

Horizontal projection ①	1500	2000	2500	3000
x	1555	2035	2510	2985

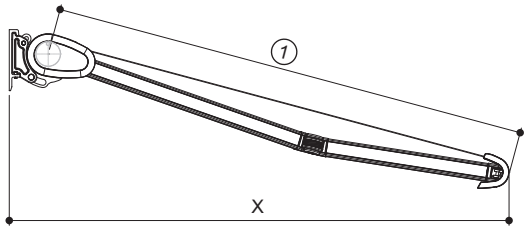

Cassette awning – CLEO 7030

Standard dimensions arm bearing position

In one piece with 2 folding arms (standard)

Projection [mm]			Width [mm]										
			2100-2500	2500-2900	2901-3400	3401-3900	3901-4400	4401-4650	4651-4900	4901-5150	5151-5400	5401-5650	5651-6000
1500	B/C	D_{min} = 1810	140*	340	540	640	640	740	840	940	940	1040	1040
	E												
2000	B/C	D_{min} = 2310		140*	240	540	640	740	840	940	940	1040	1040
	E												
2500	B/C	D_{min} = 2820			140*	240	540	740	840	940	940	1040	1040
	E												
3000	B/C	D_{min} = 3320				140*	240	540	640	740	840	940	1040
	E												

* Minimum dimension

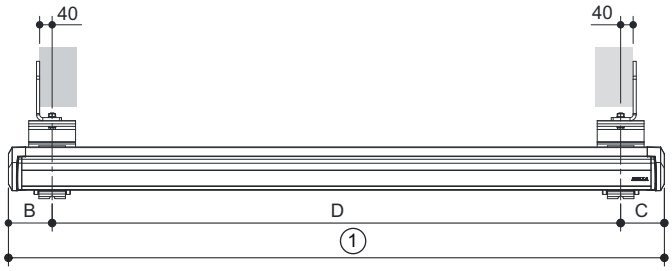

Collision check: $D_{min} \geq FB - B - C$

Please note: Observe minimum widths depending on the design!

Legend

①	Ordering width
B	Dimension from the left outer edge of the end cap up to the centre of the arm bearing
C	Dimension from the right outer edge of the end cap up to the centre of the arm bearing
E/F	Dimension from the outer edge of the end cap to the middle of the arm bearing (with 3-arm units always seen from the drive side, with 4-arm units as shown)
D/D1/D2	Dimension from the centre of the arm bearing up to the centre of the arm bearing

In one piece with 3 folding arms

Projection [mm]		Width [mm]													
		2100-2500	2501-2900	2901-3400	3401-3900	3901-4400	4401-4650	4651-4900	4901-5150	5151-5400	5401-5650	5651-6000	6001-6250	6251-6500	6501-6750	6751-7000
1500	B/C	$D1_{min}$ = 1865		140*	240	540	740	740	940	940	1040	1040	1040	1040	1040	1040
	E	$D2_{min}$ = 960		1950*	2050	2350	2650	2650	2850	2950	3150	3250	3350	3450	3550	3750
2000	B/C	$D1_{min}$ = 2310			140*	180	340	440	540	640	840	940	1040	1040	1040	1040
	E	$D2_{min}$ = 1215			2450*	2500	2700	2800	2900	3000	3150	3250	3550	3450	3550	3750
2500	B/C	$D1_{min}$ = 2820					140*	140	240	340	440	440	640	740	840	940
	E	$D2_{min}$ = 1460					2960*	2960	3060	3160	3260	3260	3460	3560	3660	3760
3000	B/C	$D1_{min}$ = 3320								140*	180	240	240	340	540	640
	E	$D2_{min}$ = 1700								3460*	3500	3600	3600	3700	3900	4000

Legend

optionally available for a surcharge

* Minimum dimension

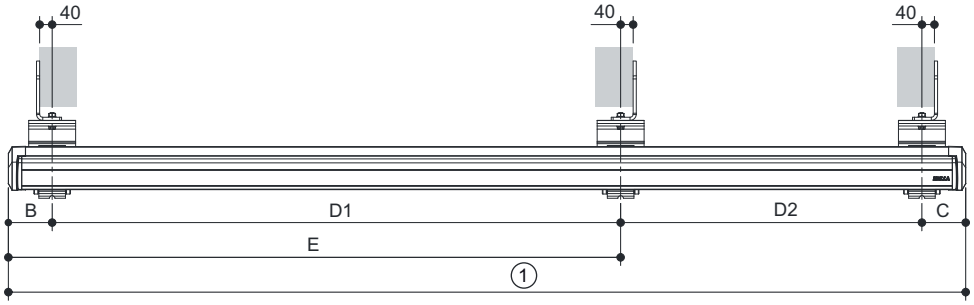

Collision check with drive system on the left side: $D1_{min} \geq E - B$ $D2_{min} \geq FB - C - E$

Collision check with drive system on the right side: $D1_{min} \geq E - C$ $D2_{min} \geq FB - B - E$

Please note: Observe minimum widths depending on the design!

Legend

①	Ordering width
B	Dimension from the left outer edge of the end cap up to the centre of the arm bearing
C	Dimension from the right outer edge of the end cap up to the centre of the arm bearing
E/F	Dimension from the outer edge of the end cap to the middle of the arm bearing (with 3-arm units always seen from the drive side, with 4-arm units as shown)
D/D1/D2	Dimension from the centre of the arm bearing up to the centre of the arm bearing

Cassette awning – CLEO 7030

Standard dimensions arm bearing position

In one piece with 4 folding arms

Projection [mm]		Width [mm]												
		2100-2500	2501-2900	2901-3400	3401-3900	3901-4400	4401-4650	4651-4900	4901-5150	5151-5400	5401-5650	5651-6000	6001-6250	6251-6500	6501-6750	6751-7000
1500	B/C	$D1_{min}$ = 1810				140*	260	400	500	650	750	750	850	850	950	950
	E	$D2_{min}$ = 960				1140*	1260	1400	1500	1650	1750	1750	1850	1850	1950	1950
2000	B/C	$D1_{min}$ = 2310							140*	140	250	400	500	700	800	950
	E	$D2_{min}$ = 1215							1390*	1390	1500	1650	1750	1950	2050	2200
2500	B/C	$D1_{min}$ = 2820											140*	700	800	950
	E	$D2_{min}$ = 1460											1600*	1950	2050	2200
3000	B/C															
	E															

Legend

optionally available for a surcharge

* Minimum dimension

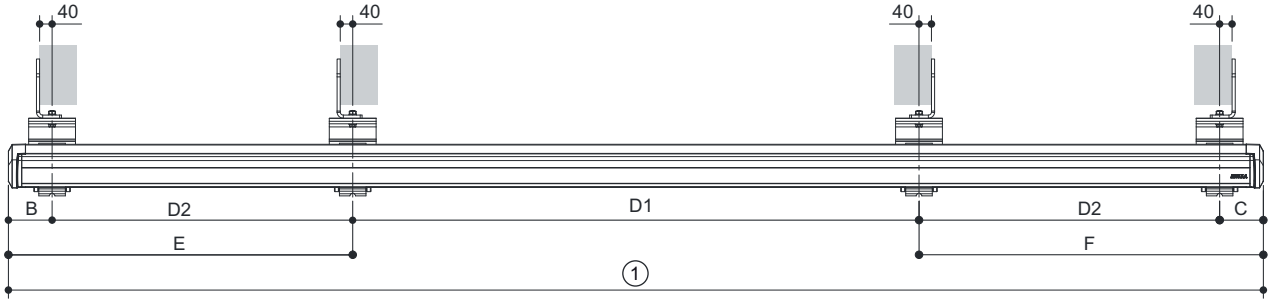

Collision check with drive system on the left side: $D1_{min} \geq FB - E - F$ $D2_{min} \geq E - B$

Collision check with drive system on the right side: $D1_{min} \geq FB - E - F$ $D2_{min} \geq F - C$

Please note: Observe minimum widths depending on the design!

Legend

①	Ordering width
B	Dimension from the left outer edge of the end cap up to the centre of the arm bearing
C	Dimension from the right outer edge of the end cap up to the centre of the arm bearing
E/F	Dimension from the outer edge of the end cap to the middle of the arm bearing (with 3-arm units always seen from the drive side, with 4-arm units as shown)
D/D1/D2	Dimension from the centre of the arm bearing up to the centre of the arm bearing

Attention:
By default, the unit is symmetric B = C and E = F. The B- C- E- and F-dimension can be changed for asymmetric applications (e.g. with rafters) by +/-200 mm each.
No later deviation between bracket position and arm bearing position possible due to milled edge in the cassette profile.
Condition 1: Arm bearing dimension B and C min. 140 mm (for version with emergency crank handle min. 150 mm)/max.1040 mm.
Condition 2: Collision check of the arms
This deviation must always be indicated in the order by means of a sketch.

Installation in recess

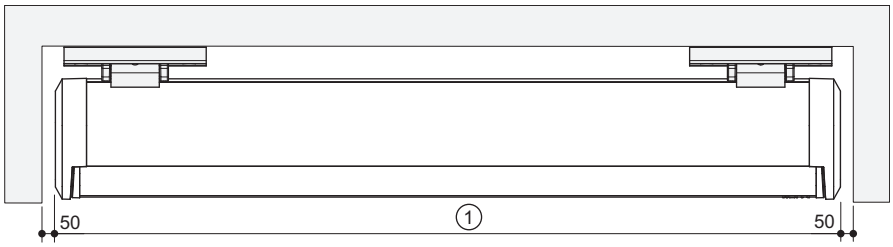

Legend

① Ordering width

Cable exits

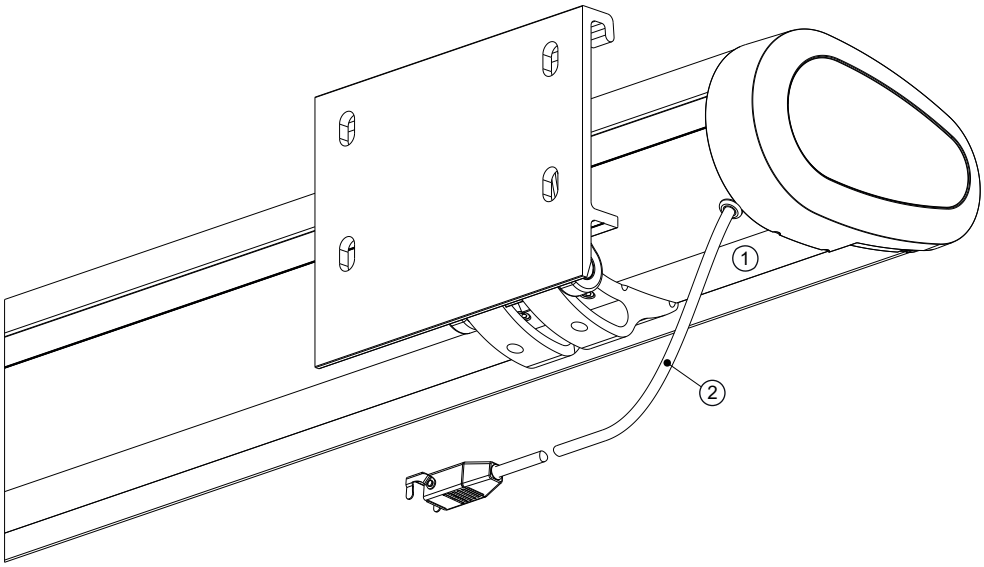

Legend

① Cable exit towards the rear (standard)
② 230V power cable (motor)

Cassette awning – CLEO 7040





Easy inclination adjustment from 5° - 40°



Folding arm with hidden, high-strength pull tape, optionally available with integrated LED lighting



Varioplus roller blind integrated in the drop-down profile, as additional sun and privacy protection (only with motor drive).

Limit sizes

Awning

Min./max. dimensions with sloping projection [mm]	1500	2000	2500	3000	3500	4000
Single unit						
Maximum width	7000	7000	7000	7000	7000	7000
Number of articulated arms up to 6000 mm width	2	2	2	2	2	2
Number of articulated arms 6001 - 6199 mm width	3	3	3	3	2	-
Number of articulated arms with 6200 - 6949 mm width	3	3	3	3	3	-
Number of articulated arms with 6950 - 7000 mm width	3	3	3	3	3	3
Minimum width with crank	2170	2670	3170	3670	4170	-
Minimum width with motor (2 arms)	2170	2670	3170	3670	4170	4670
Minimum width with motor (3 arms)	3200	3950	4700	5450	6200	6950
Minimum width with motor (4 arms)	4230	5230	6230	-	-	-

Attention:

Single units with 3 and 4 articulated arms are only possible with a motor.

Cover

Single unit	Acrylic fabric	Acrylic All-weather	324 Firemaster	Polyester fabric - PVC-free	Polyester fabric - PVC coated
Maximum width [mm]	7000	7000	7000	7000	4000
Maximum sloping projection [mm]	4000	3500	3000	4000	3500

Types of installation

Wall installation

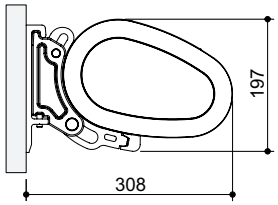

Ceiling installation

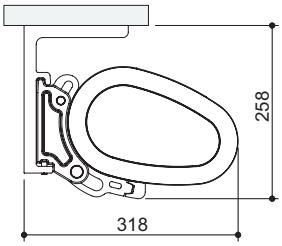

Rafter installation

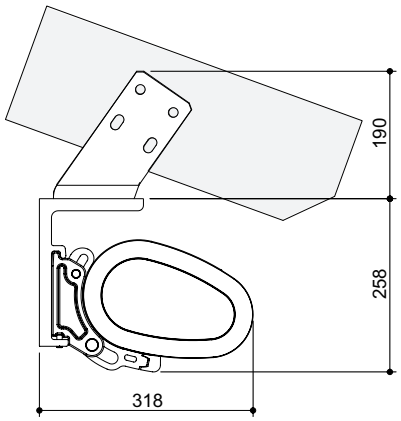

Option - Varioplus roller blind (VP)

Wall installation

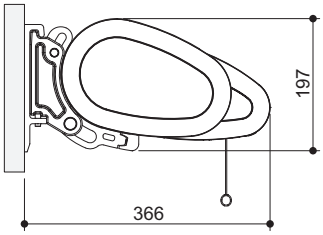

Ceiling installation

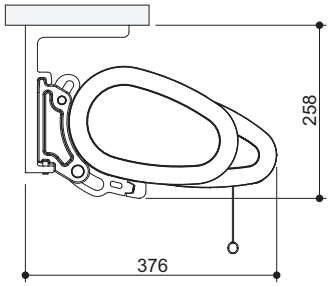

Rafter installation

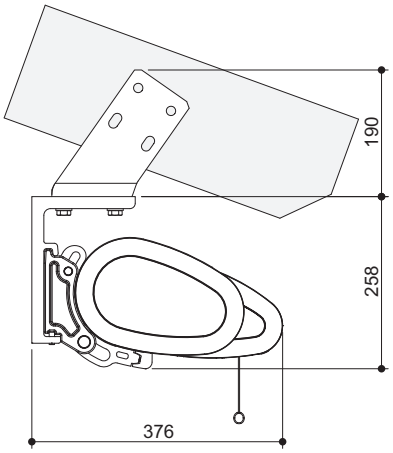

Integrated in the extension tube, as additional sun and view protection.
Operation via radio motor or motor with switch operation.

Varioplus roller blind - maximum height of roller blind [mm]

	Acrylic fabric	Acrylic All-weather	Polyester fabric - PVC-free	Polyester fabric - PVC coated
Motor drive	1000	1000	1000	1500

The cover width equals the awning cover. Tolerance of variations in length acc. to EN 13561.

Scope of delivery

- CLEO 7040 cassette awning with freely selectable frame color from the HELLA color world
- Large selection of sewn acrylic and polyester awning fabrics
- Motor drive for switch operation
- Wall bracket for mounting on concrete (C20/C25) or metal incl. design for brackets on alternative mounting surface and alternative mounting types
- Articulated arm with concealed pull system
- Inclination adjustment with wall installation 5° - 40°

Supplementary equipment

- Brackets for wall, ceiling or rafter mounting
- Cloths made of Allwetter, recycled polyester and SOLTIS
- bonded and UltraSeam fabrics
- Operation via radio motor
- Sensors for wind, sun and precipitation
- Varioplus roller blind for low sun and as privacy screen
- LED lighting in the articulated arms for a pleasant ambience
- Infrared radiant heater

Benefits of the product

- Heat protection
- Glare protection
- Sight screen
- Protection against UV radiation
- Design element
- Due to the full cassette the roller tube and folding arms are protected and not visible
- High-quality construction elements guarantee a long lifespan and convenient operation
- Large color selection for color coordination with the façade

Cassette awning – CLEO 7040

Brackets

Wall bracket type B (standard)
Art. no. 03630505

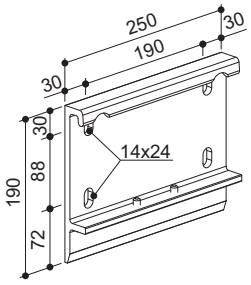

Wall bracket type C
Art. no. 03630506

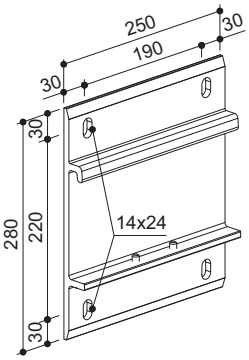

Wall bracket type D
Art. no. 03630507

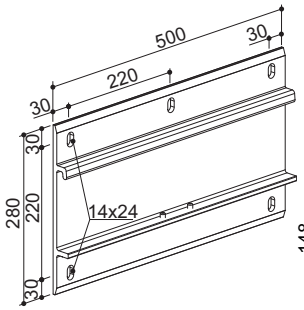

Wall bracket type I
Art. no. 03630526

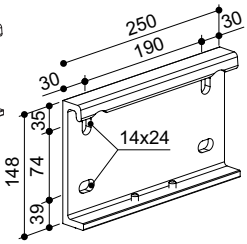

Ceiling bracket Type E
Art. no. 03630511

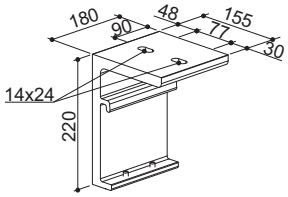

Ceiling bracket type F
Art. no. 03630512

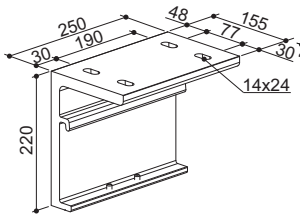

Ceiling bracket type G
Art. no. 03630513

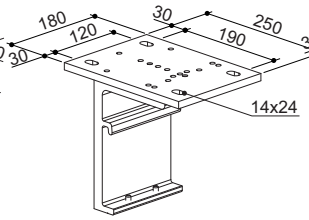

Ceiling bracket type H
Art. no. 03630514

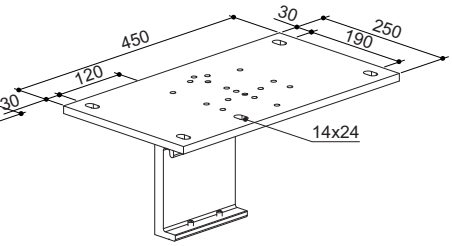

Rafter bracket type K on the left side
Art. no. 03630515

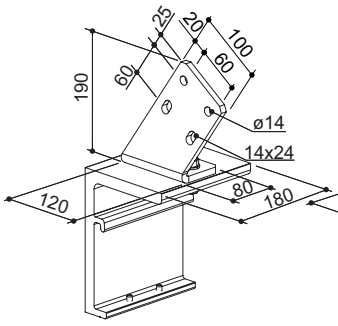

Rafter bracket type K on the right side
Art. no. 03630528

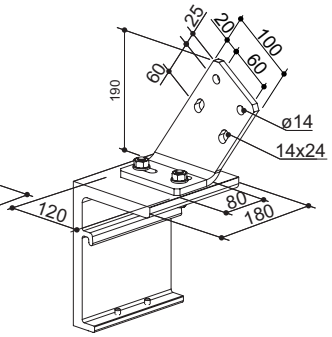

Weight in kg depending on the width and the sloping projection

Width [mm]	1500	2000	2500	3000	3500	4000	Varioplus
	Projection [mm]						Additional weights
2500	53						9
3000	59	62					11
3500	64	67	69				12
4000	69	72	74	79			14
4500	75	78	80	85	88		15
5000	80	83	86	90	94	97	17
5500	86	89	91	96	100	102	18
6000	91	94	97	101	105	108	20
6219	103	107	110	117	108		
6500	106	110	113	120	126		
7000	111	116	119	126	132	136	

Extra weights [kg]

additional folding arm	8
LED lighting	2

Legend

	Weight [kg] with 2 folding arms
	Weight [kg] with 3 folding arms

Definition maximum sloping projection (with inclination 15°)

Horizontal projection ①	1500	2000	2500	3000	3500	4000
x (without VP)	1735	2215	2690	3165	3640	4115
x (with VP)	1795	2275	2750	3225	3700	-

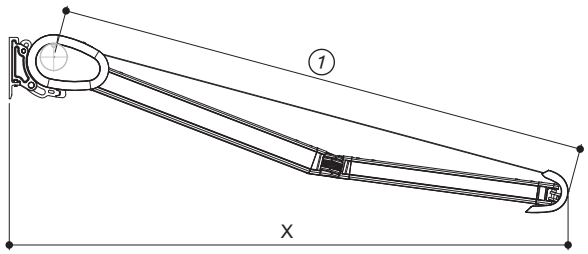

CLEO 7040 without VP

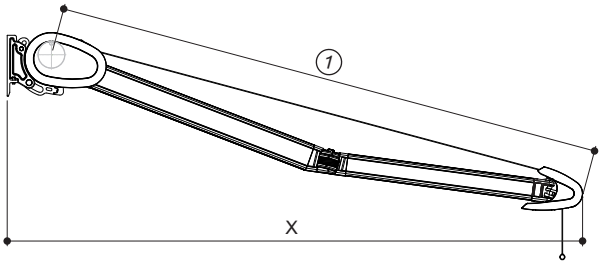

CLEO 7040 with VP

Cassette awning – CLEO 7040

Standard dimensions arm bearing position

In one piece with 2 folding arms (standard)

Projection [mm]		Width [mm]											
		to 2500	2501 - 3000	3001 - 3500	3501 - 4000	4001 - 4500	4501 - 4750	4751 - 5000	5001 - 5250	5251 - 5500	5501 - 5750	5751 - 6000	6001 - 6219
1500	B/C	D_{min} = 1890	140*	300	500	600	700	800	800	900	900	1000	1000	
	E	D_{min} = 1960**											
2000	B/C	D_{min} = 2390		140*	300	500	700	800	800	900	900	1000	1000	
	E	D_{min} = 2460*											
2500	B/C	D_{min} = 2890			140*	300	500	600	600	700	700	1000	1000	
	E	D_{min} = 2960**											
3000	B/C	D_{min} = 3390				140*	300	500	500	700	700	1000	1000	
	E	D_{min} = 3460**											
3500	B/C	D_{min} = 3890					140*	300	300	500	500	700	700	1000
	E	D_{min} = 3960**											
4000	B/C	D_{min} = 4390						140*	180	270	395	510	635	
	E	D_{min} = 4460**											

* Minimum dimension

** with complete width > 5000 mm

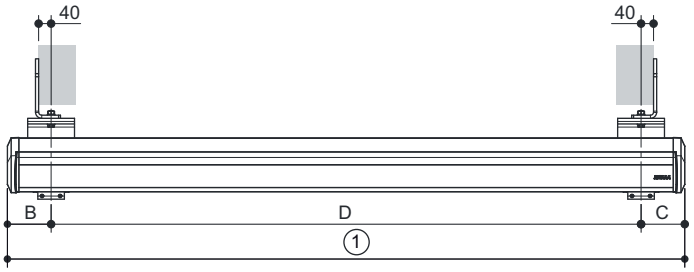

Collision check: $D_{min} \geq FB - B - C$

Please note: Observe minimum widths depending on the design!

Legend

①	Ordering width
B	Dimension from the left outer edge of the end cap up to the centre of the arm bearing
C	Dimension from the right outer edge of the end cap up to the centre of the arm bearing
E/F	Dimension from the outer edge of the end cap to the middle of the arm bearing (with 3-arm units always seen from the drive side, with 4-arm units as shown)
D/D1/D2	Dimension from the centre of the arm bearing up to the centre of the arm bearing

In one piece with 3 folding arms

Projection [mm]		Width [mm]										
		to 2500	2501-3000	3001-3500	3501-4000	4001-4500	4501-5000	5001-5500	5501-6000	6001-6250	6251-6500	6501-6750	6751-7000
1500	B/C	$D1_{min}$ = 1890		140*	200	300	500	600	800	1000	1000	1000	1000
	E	$D2_{min}$ = 1030		2030*	2100	2300	2500	2800	3100	3300	3500	3600	3700
2000	B/C	$D1_{min}$ = 2390			140*	140	300	400	700	900	1000	1000	1000
	E	$D2_{min}$ = 1280			2530*	2550	2700	2900	3100	3300	3500	3600	3700
2500	B/C	$D1_{min}$ = 2890					140*	200	300	600	700	800	900
	E	$D2_{min}$ = 1530					3030*	3100	3200	3500	3600	3700	3800
3000	B/C	$D1_{min}$ = 3390						140*	140	140	140	140	140
	E	$D2_{min}$ = 1780						3530*	3530	3530	3530	3530	3650
3500	B/C	$D1_{min}$ = 3890								140*	140	140	140
	E	$D2_{min}$ = 2030								4030*	4030	4030	4030
4000	B/C	$D1_{min}$ = 4390											140*
	E	$D2_{min}$ = 2280											4530*

Legend

optionally available for a surcharge

* Minimum dimension

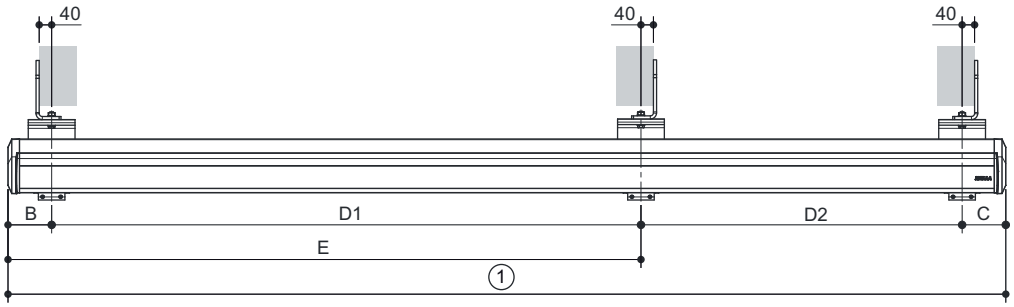

Collision check with drive system on the left side: $D1_{min} \geq E - B$ $D2_{min} \geq FB - C - E$

Collision check with drive system on the right side: $D1_{min} \geq E - C$ $D2_{min} \geq FB - B - E$

Please note: Observe minimum widths depending on the design!

Legend

①	Ordering width
B	Dimension from the left outer edge of the end cap up to the centre of the arm bearing
C	Dimension from the right outer edge of the end cap up to the centre of the arm bearing
E/F	Dimension from the outer edge of the end cap to the middle of the arm bearing (with 3-arm units always seen from the drive side, with 4-arm units as shown)
D/D1/D2	Dimension from the centre of the arm bearing up to the centre of the arm bearing

Cassette awning – CLEO 7040

Standard dimensions arm bearing position

In one piece with 4 folding arms

Projection [mm]		Width [mm]										
		to 2500	2501-3000	3001-3500	3501-4000	4001-4500	4501-5000	5001-5500	5501-6000	6001-6250	6251-6500	6501-6750	6751-7000
1500	B/C	$D1_{min}$ = 1890				140*	200	500	600	800	900	1000	1000
	E	$D2_{min}$ = 1030				1170*	1250	1550	1650	1850	1950	2050	2050
2000	B/C	$D1_{min}$ = 2390						140*	200	500	600	700	800
	E	$D2_{min}$ = 1280						1420*	1500	1800	1900	2000	2100
2500	B/C	$D1_{min}$ = 2890								140*	140	250	350
	E	$D2_{min}$ = 1530								1670*	1670*	1800	1900
3000	B/C												
	E												
3500	B/C												
	E												
4000	B/C												
	E												

Attention:
Difference: max. +-50 mm possible

Legend

optionally available for a surcharge

* Minimum dimension

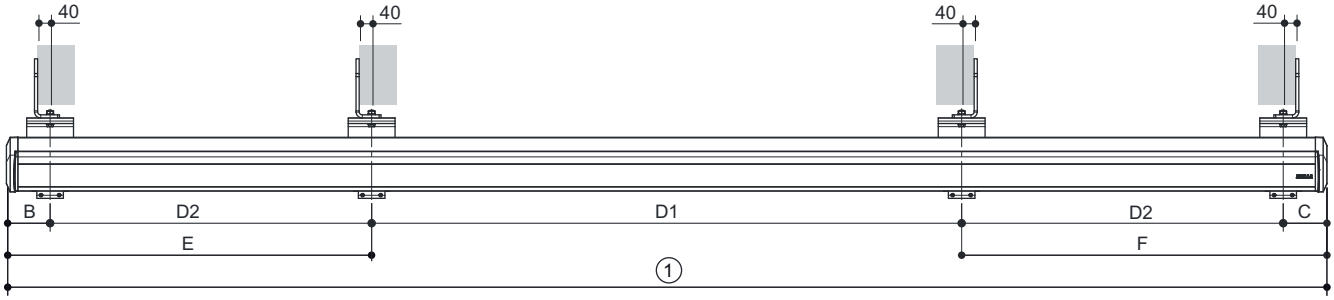

Collision check with drive system on the left side: $D1_{min} \geq FB - E - F$ $D2_{min} \geq E - B$

Collision check with drive system on the right side: $D1_{min} \geq FB - E - F$ $D2_{min} \geq F - C$

Please note: Observe minimum widths depending on the design!

Legend

①	Ordering width
B	Dimension from the left outer edge of the end cap up to the centre of the arm bearing
C	Dimension from the right outer edge of the end cap up to the centre of the arm bearing
E/F	Dimension from the outer edge of the end cap to the middle of the arm bearing (with 3-arm units always seen from the drive side, with 4-arm units as shown)
D/D1/D2	Dimension from the centre of the arm bearing up to the centre of the arm bearing

Please note:
By default, the unit is symmetric B = C and E = F. The B- C- E- and F-dimension can be changed for asymmetric applications (e.g. with rafters) by +/-200 mm each (not for a unit with a sloping projection of 4000 mm with 2 folding arms).
Moreover, the admissible deviation between bracket position and arm bearing position is +/-50 mm.
Condition 1: Arm bearing dimension B and C min. 140 mm / max. 1100 mm.
Condition 2: Collision check of the arms
This deviation must always be indicated in the order by means of a sketch.

If mounting brackets with the large mounting plate are used, consider the minimum widths to avoid that the mounting plates project beyond the awning!

***... Observe the minimum space B/C for the different brackets:**

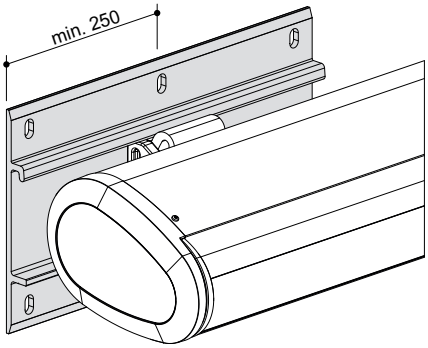

min. 250 mm with bracket Type D

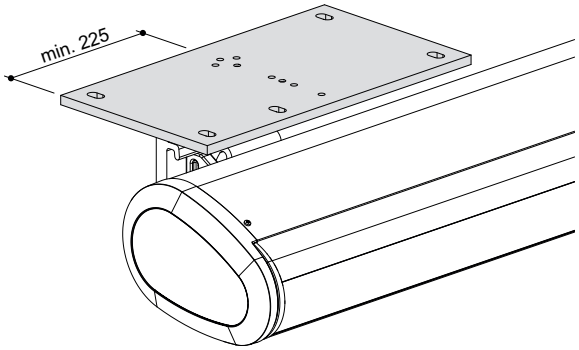

min. 225 mm with bracket Type H

Installation in recess

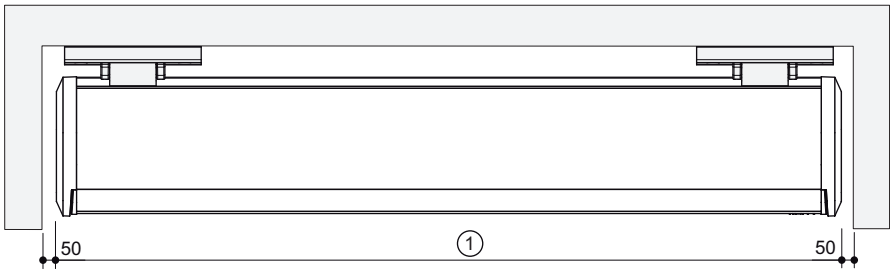

Legend

① Ordering width

Cassette awning – CLEO 7040

Cable exits

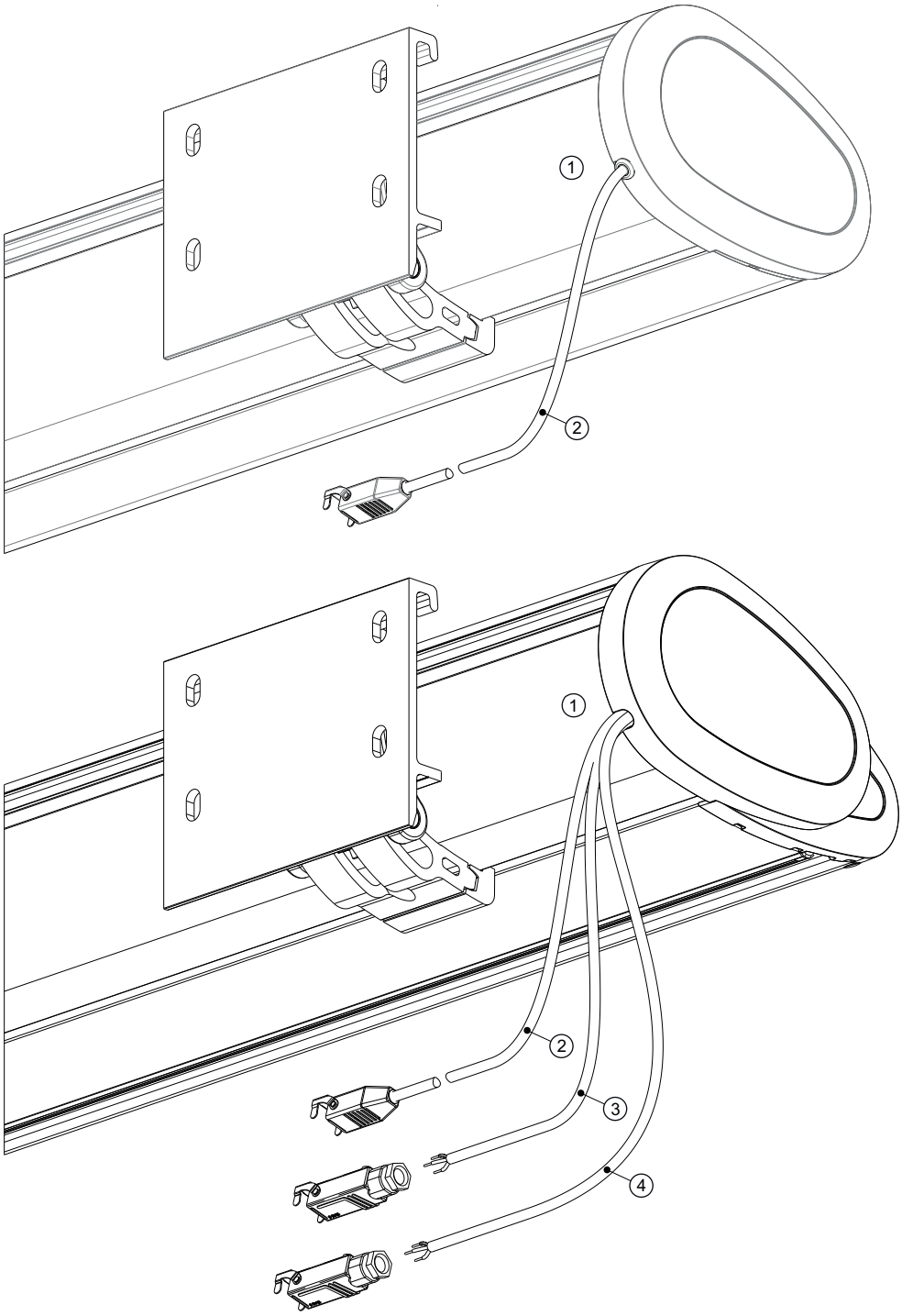

Legend

①	Cable exit towards the rear (standard)
②	230V power cable (motor)
③	230V power cable (LED)
④	230V power cable (Varioplus roller blind)

Cassette awning – C2



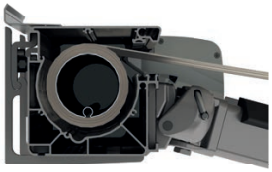

Torsionally rigid cassette awning due to one-piece fabric box profile; optional wall connection profile for wall mounting.

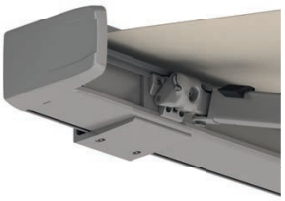

The tilt joint arm bearing with anti-lift device enables many years of safe closing behaviour and prevents the awning from swinging up in gusts of wind.



Varioplus roller blind elegantly integrated in the drop-out profile, for additional sun and privacy protection.

Limit sizes

Awning

Min./max. dimensions with sloping projection [mm]	1500	2000	2500	3000	3500	4000
Single unit						
Maximum width	7000	7000	7000	7000	7000	7000
Number of articulated arms up to 6000 mm width	2	2	2	2	2	2
Number of articulated arms 6001 - 7000 mm width	3	3	3	3	3	3
Minimum width with crank	2000	2500	3000	3500	4000	-
Minimum width with motor (2 arms)	2000	2500	3000	3500	4000	4500
Minimum width with motor (3 arms)	2920	3670	4420	5180	5930	7000
paired unit						
Maximum width	14000	14000	14000	14000	14000	14000
Number of articulated arms with 12001 - 12339 mm width	4	4	4	4	4	4
Number of articulated arms with 12340 - 13839 mm width	6	6	6	6	6	6
Minimum width with motor (4 arms)	4000	5000	6000	7000	8000	9000
Minimum width with motor (6 arms)	5840	7340	8840	10360	11860	13360

Attention:

Single units with 3 articulated arms or a sloping projection of 4000 mm and paired units are only possible with a motor.

Cover

Single unit	Acrylic fabric	Acrylic All-weather	324 Firemaster*	Polyester fabric - PVC-free	Polyester fabric - PVC coated*
Maximum width [mm]	7000	7000	7000	7000	4000
Maximum projection [mm]	4000	3500	3000	4000	3500

* The 324 Firemaster and Polyester fabric - PVC coated covers are not compatible with linked units.

Types of installation

Wall installation

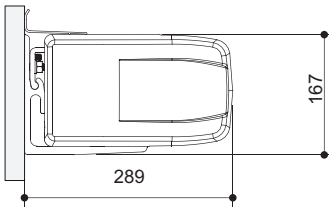

Ceiling installation

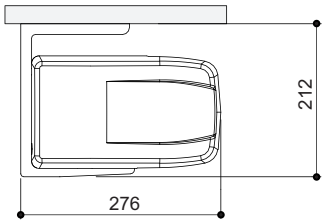

Rafter installation

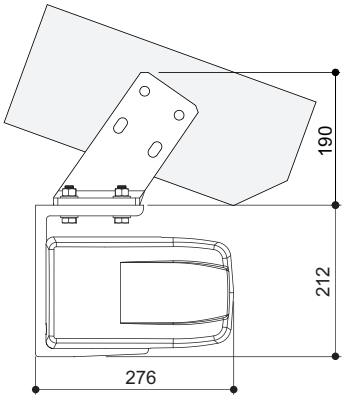

Option - Varioplus roller blind (VP)

Wall installation

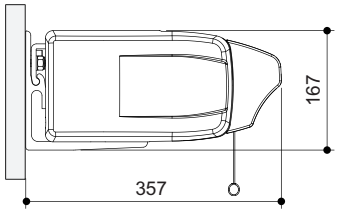

Ceiling installation

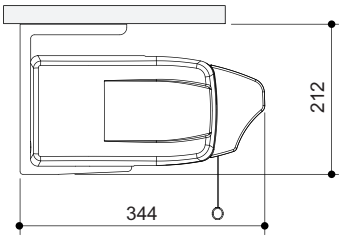

Rafter installation

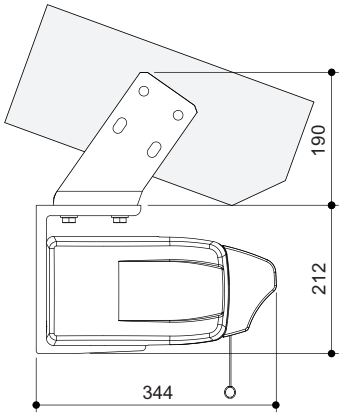

Integrated in the extension tube, as additional sun and view protection.
Operation via special gear with crank rod, radio motor or motor with switch operation.

Varioplus roller blind - maximum height of roller blind [mm]

	Acrylic fabric	Acrylic All-weather	Polyester fabric - PVC-free	Polyester fabric - PVC coated
Crank drive	1900	1900	1900	2500
Motor drive	1000	1000	1000	1500

The cover width equals the awning cover. Tolerance of variations in length acc. to EN 13561.

Scope of delivery

- C2 cassette awning with freely selectable frame color from the HELLA color range
- Large selection of sewn acrylic and polyester awning fabrics
- Motor drive for switch operation
- Wall bracket for mounting on concrete (C20/C25) or metal incl. design for brackets on alternative mounting surface and alternative mounting types
- Tilt arm bearing with inclination adjustment 5° - 40°

Supplementary equipment

- Linked up to a width of 14 m
- Brackets for wall, ceiling or rafter mounting
- Cloths made of all-weather, recycled polyester and SOLTIS
- Glued and UltraSeam covers
- Operation with crank and radio motor
- Sensors for wind, sun and precipitation
- Wall Connection Profile
- Varioplus roller blind for low sun and protection from unwanted glances
- Infrared radiant heater

Benefits of the product

- Heat protection
- Glare protection
- Sight screen
- Protection from UV radiation
- Due to the full cassette the roller tube and folding arms are protected and not visible
- High-quality construction elements guarantee a long lifespan and convenient operation
- Large color selection for color coordination with the façade

Cassette awning – C2

Brackets

Wall bracket Type A
Art. no. 034905E1

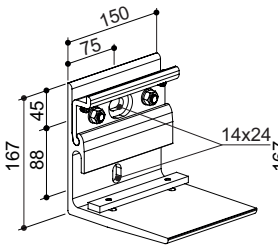

Wall bracket type B
Art. no. 034905E2

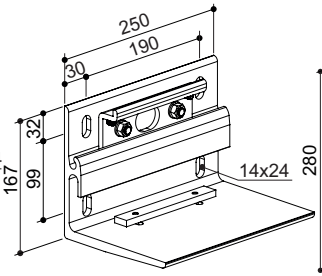

Wall bracket type C
Art. no. 034905E3

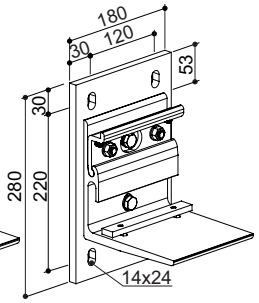

Wall bracket type D
Art. no. 034905E4

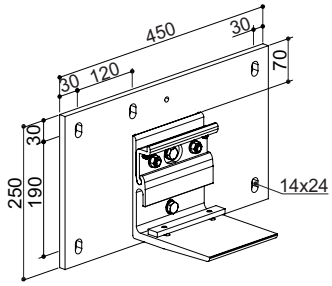

Ceiling bracket Type E
Art. no. 034905E5

Ceiling bracket type F
Art. no. 034905E6

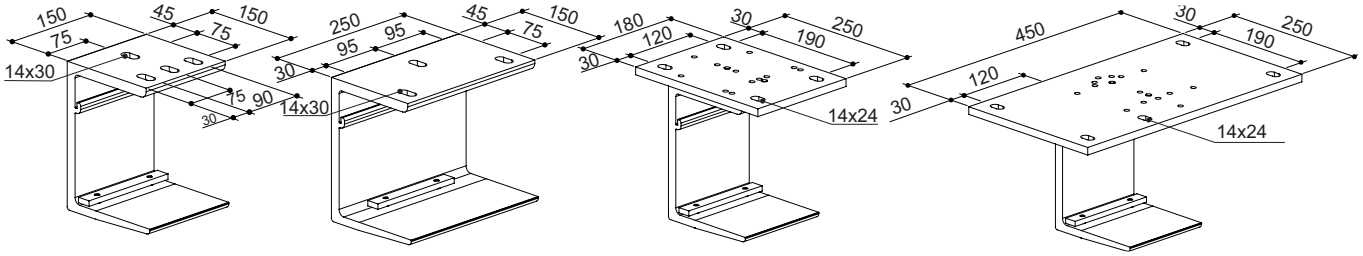

Ceiling bracket type G
Art. no. 034905E7

Ceiling bracket type H
Art. no. 034905E8

Rafter bracket type K, left
Art. no. 034905E9

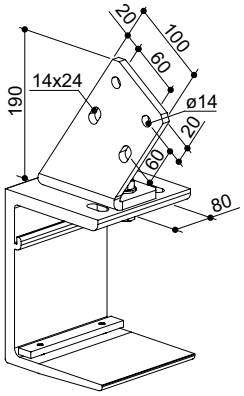

Rafter bracket type K, right
Art. no. 03490508

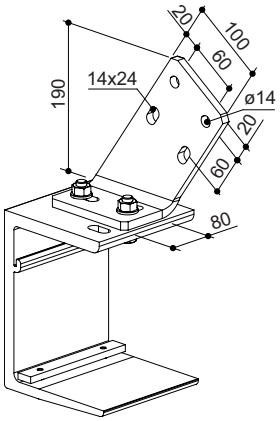

Weight in kg depending on the width and the sloping projection

Width [mm]	1500	2000	2500	3000	3500	4000	Varioplus
	Projection [mm]						Additional weights
2000	41						6
2500	48	49					8
3000	53	56	58				9
3500	61	63	65	68			10
4000	68	70	72	75	81		12
4500	75	77	78	82	88	90	13
5000	82	84	86	90	95	97	14
5500	89	91	93	97	103	105	16
6000	96	98	100	104	110	112	17
6500	107	110	113	118	126	129	
7000	114	117	120	125	134	136	

Legend

Weight [kg] with 2 folding arms

Weight [kg] with 3 folding arms

Definition maximum sloping projection (with inclination 15°)

Horizontal projection ①	1500	2000	2500	3000	3500	4000
x (without VP)	1580	2050	2530	3010	3485	3955
x (with VP)	1645	2115	2595	3075	3550	-

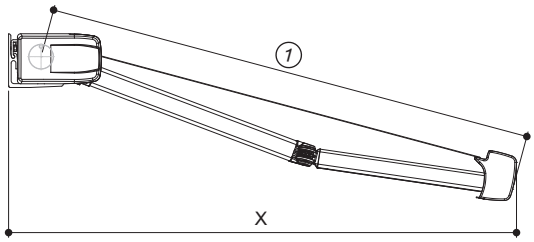

C2 without VP

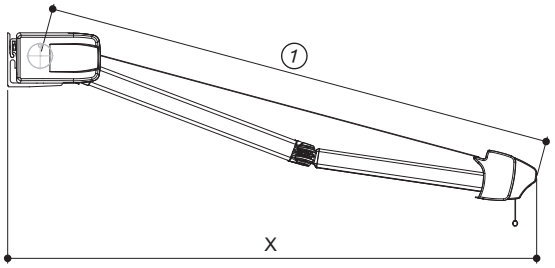

C2 with VP

Cassette awning – C2

Standard dimensions arm bearing position

In one piece with 2 articulated arms

Projection [mm]		Width [mm]																
		2000-2250	2251-2500	2501-2750	2751-3000	3001-3250	3251-3500	3501-3750	3751-4000	4001-4250	4251-4500	4501-4750	4751-5000	5001-5250	5251-5500	5501-5750	5751-6000
1500	B/C	Dmin = 1716	142*	250	375	475	510	550	585	625	660	700	735	785	810	850	885	925
	E																	
2000	B/C	Dmin = 2216		142*	150*	240	365	490	585	625	660	700	735	775	810	850	885	925
	E																	
2500	B/C	Dmin = 2716				142*	145*	225	350	475	600	700	735	775	810	850	885	925
	E																	
3000	B/C	Dmin = 3216						142*	145*	225	335	460	585	710	810	850	885	925
	E																	
3500	B/C	Dmin = 3716								142*	145*	225	265	390	515	640	765	890
	E																	
4000	B/C	Dmin = 4216										142*	145*	225	265	390	515	640
	E																	

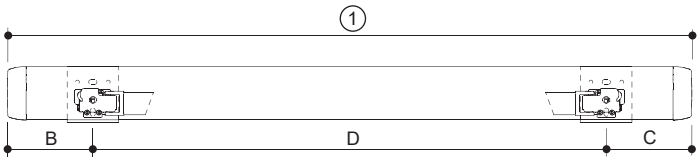

2 articulated arms
2 brackets

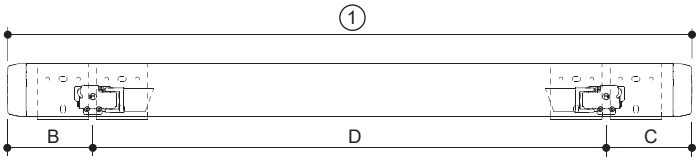

2 articulated arms
4 brackets

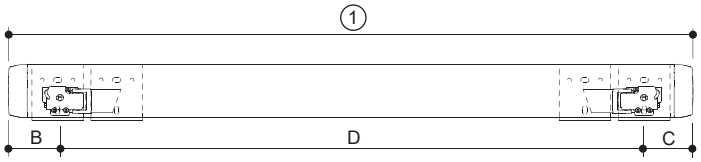

2 articulated arms
Position all the way to the outside
4 brackets

Collision check: $D_{min} \geq FB - B - C$

Legend

①	Ordering width
B/C	Dimension from the outer edge of the awning up to the centre of the arm bearing
D	Dimension from the centre of the arm bearing up to the centre of the arm bearing

In one piece with 3 articulated arms

			6001-6250	6251-6500	6501-6750	6751-7000
			Width [mm]			
1500	B/C	D1min = 1716	450	500	550	600
	E	D2min = 920	3250	3375	3500	3625
2000	B/C	D1min = 2216	450	500	550	600
	E	D2min = 1170	3250	3375	3500	3625
2500	B/C	D1min = 2716	300	350	400	450
	E	D2min = 1420	3250	3375	3500	3625
3000	B/C	D1min = 3216	142*	142*	150*	200
	E	D2min = 1680	3377	3377	3500	3624
3500	B/C	D1min = 3716	142*	142*	142*	142*
	E	D2min = 1930	3874	3874	3874	3874
4000	B/C	D1min = 4216			142*	142*
	E	D2min = 2180			4363	4363

Projection [mm]

Legend

optionally available for a surcharge

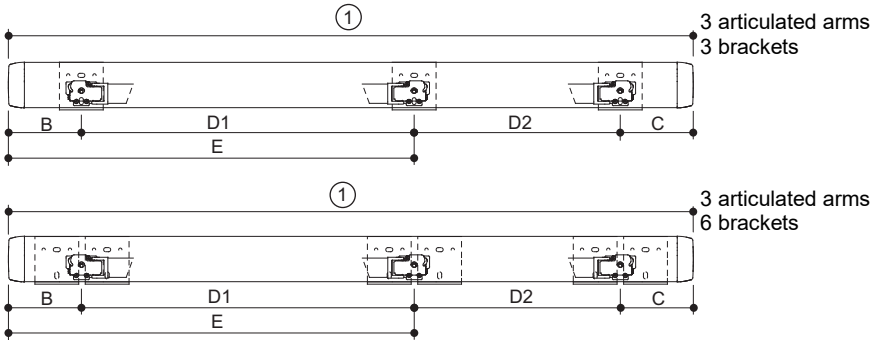

Collision check with drive system on the left side: $D1_{min} \geq E - B$ $D2_{min} \geq FB - C - E$

Collision check with drive system on the right side: $D1_{min} \geq E - C$ $D2_{min} \geq FB - B - E$

Legend

①	Ordering width
B/C	Dimension from the outer edge of the awning up to the centre of the arm bearing
E/F	Dimension from the outer edge of the awning to the middle of the arm bearing always seen from the drive side with 3-arm units
D/D1/D2	Dimension from the centre of the arm bearing up to the centre of the arm bearing

Note:

*...Observe the minimum space for the different brackets:

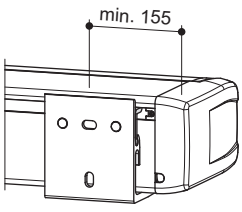

min. 155 mm with bracket Type A, C, K, E, G

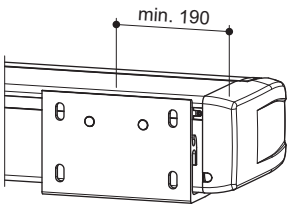

min. 190 mm with bracket Type B

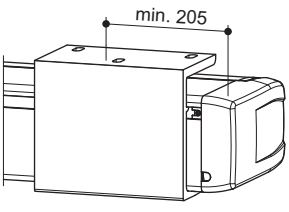

min. 205 mm with bracket Type F

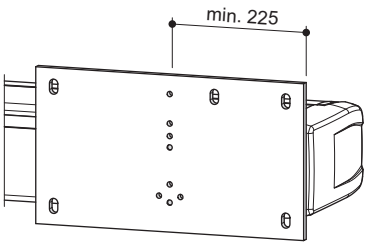

min. 225 mm with bracket Type D, H

Note:

If mounting brackets are used with the large mounting plate (type D, H), it must be ensured that the mounting plate does not project beyond the awning with the minimum widths.

Permissible deviation between bracket position and arm bearing position +/-50 mm.

Cassette awning – C2

Cable exits

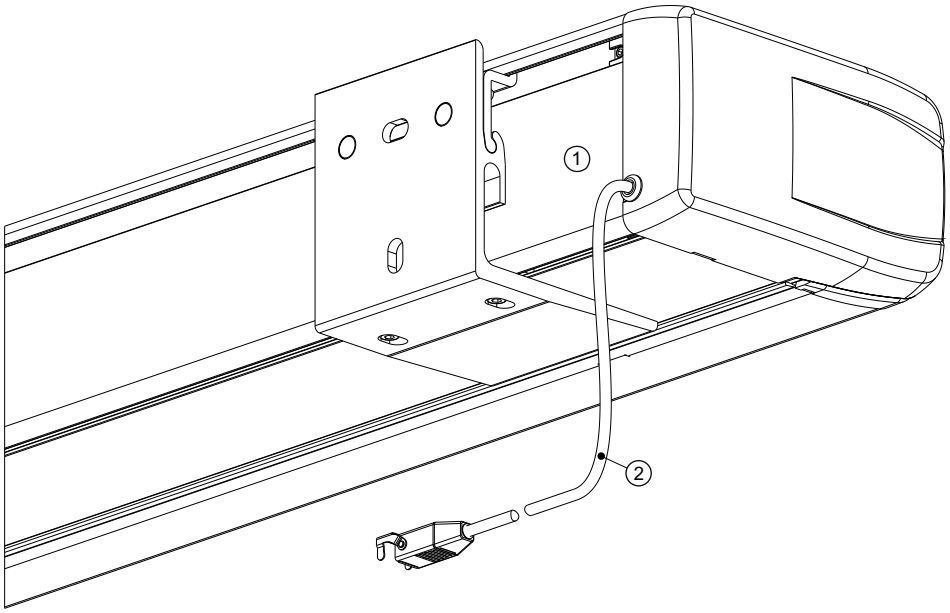

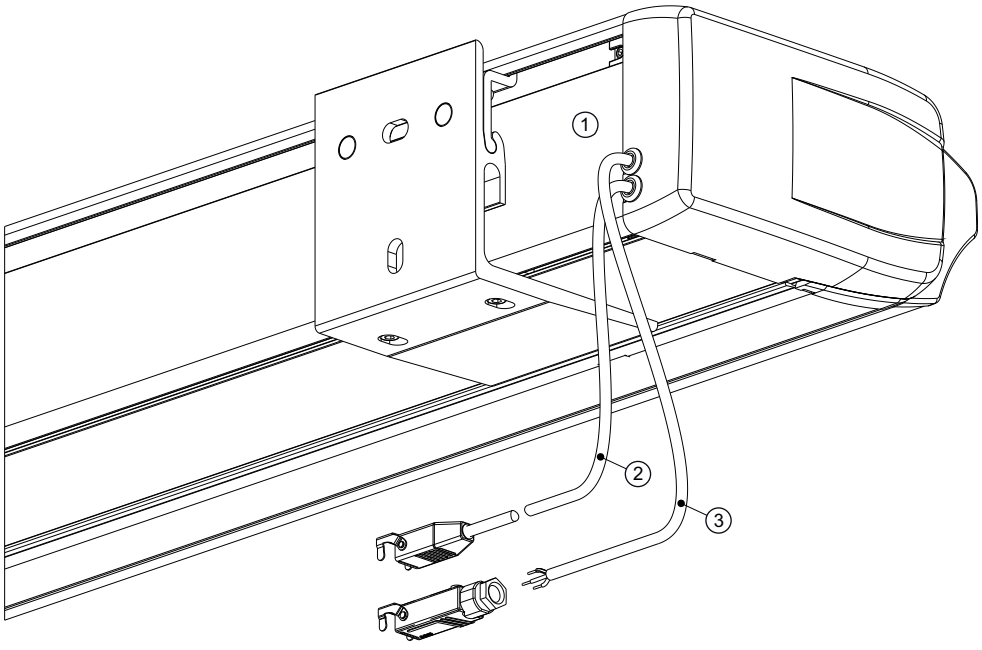

Legend

①	Cable exit towards the rear (standard)
②	230V power cable (motor)
③	230V power cable (Varioplus roller blind)

Varioplus roller blind (VP)

Integrated in the extension tube, as additional sun and view protection.
Operation via special gear with crank rod, radio motor or motor with switch operation.

Tolerance of variations in length acc. to EN 13561.

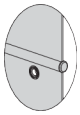

Eyelets only possible in combination with crank handle drive and valance.

Type: AREIA 7040



The cover width equals the width of the awning cover.
Varioplus roller blind (VP) only available for single units with a sloping projection of max. 3500 mm and a maximum complete width of 6000 mm.

Legend

① Height of the roller blind

	Acrylic fabric	Acrylic All-weather	Polyester fabric - PVC-free	Polyester fabric - PVC coated
Crank drive	1900	1900	1900	2500
Motor drive	1000	1000	1000	1500

The cover width equals the awning cover. Tolerance of variations in length acc. to EN 13561.

Type: VIVA 7040

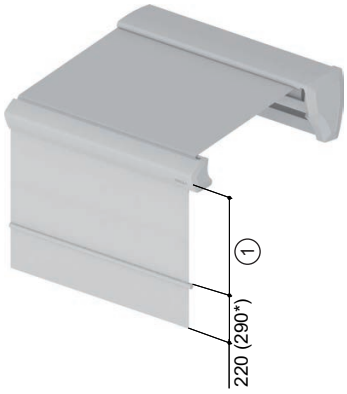

The cover width equals the width of the awning cover.
Varioplus roller blind (VP) only available for single units of up to a max. width of 7000 mm and a sloping projection of 3500 mm.

Legend

① Height of the roller blind
* with design maxima

	Acrylic fabric	Acrylic All-weather	Polyester fabric - PVC-free	Polyester fabric - PVC coated
Crank drive	1900	1900	1900	2500
Motor drive	1000	1000	1000	1500

The cover width equals the awning cover. Tolerance of variations in length acc. to EN 13561.

Type: CLEO 7040

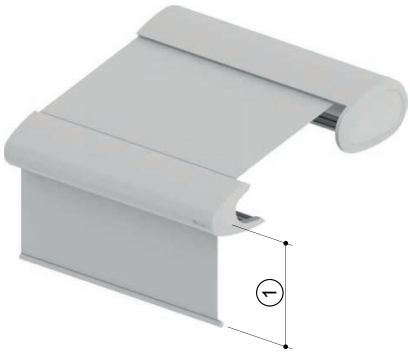

Varioplus roller blind (VP) only available for single units with a complete width of up to 6000 mm with a maximum projection of 3500.

Legend

① Height of the roller blind

	Acrylic fabric	Acrylic All-weather	Polyester fabric - PVC-free	Polyester fabric - PVC coated
Motor drive	1000	1000	1000	1500

The cover width equals the awning cover. Tolerance of variations in length acc. to EN 13561.

Type: C2

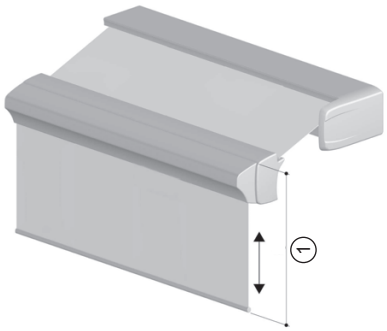

Varioplus roller blind (VP) only available for single units with a complete width of up to 6000 mm with a maximum projection of 3500.

Legend

① Height of the roller blind

	Acrylic fabric	Acrylic All-weather	Polyester fabric - PVC-free	Polyester fabric - PVC coated
Crank drive	1900	1900	1900	2500
Motor drive	1000	1000	1000	1500

The cover width equals the awning cover. Tolerance of variations in length acc. to EN 13561.

Wind and sight screens



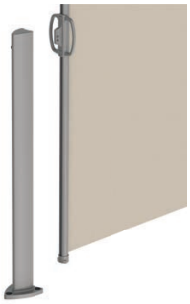

Available in two different heights.
Free-standing with column.



Simple assembly of the free-standing column with floor bracket for setting in concrete or hammering in.

Limit sizes

	Acrylic fabric	Acrylic All-weather	Polyester fabric - PVC coated
maximum projection			
Wind and privacy screen with height 1300 mm	4000	3500	4000
Wind and privacy screen with height 1900 mm	3000	3000	3000

Scope of delivery

- Wind and privacy screen with brackets, cassette and drop-out profile in standard colors RAL 9016 and RAL 9006
- Available in two standard heights 1300 mm and 1900 mm
- Handle holder and pull handle
- Large selection of sewn acrylic and polyester awning fabrics

Supplementary equipment

- Cloths made of Allwetter, recycled polyester and SOLTIS
- Glued covers
- Special colors according to RAL color chart

Benefits of the product

- Wind protection
- Sight screen
- Atmosphere
- Design element

Types of installation

Installation of the cassette via wall brackets

The installation is carried out by using two wall brackets, which are fixed to the wall. The cassette will be hooked into these wall brackets.

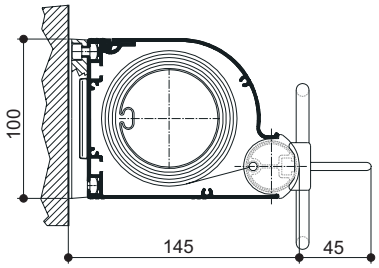

Installation of the cassette laterally via bracket

The installation is carried out by using two mounting brackets, which are fixed to the wall. Fix the wall brackets, in which the cassette will be hooked-in, to the angular brackets.

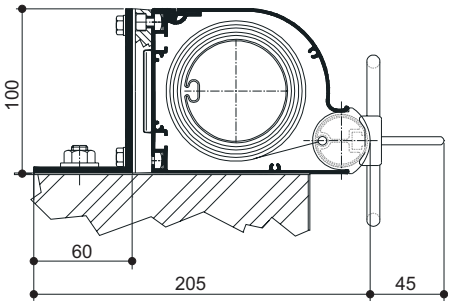

Mounting accessories

Pole type A 1300 mm / 1900 mm

Art. no. 032844 / 32848

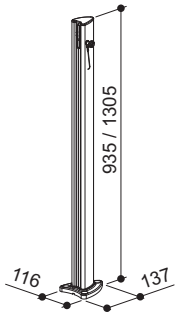

Post type B 1300 mm / 1900 mm (column screwed to mounting plate, column can be removed)

Art. no. 032845 / 032849

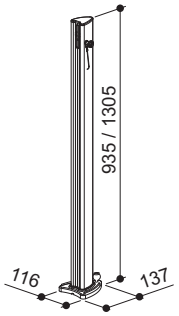

Floor bracket (for driving in)

Type A: Art. no. 032856

Type B: Art. no. 032847



Floor bracket (for encasing in concrete)

Art. no. 032846

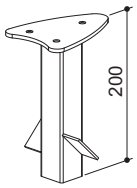

Mounting bracket (for lateral fixing of the handle)

Art. no. 032842

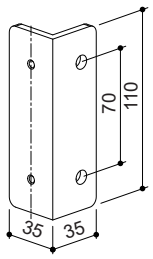

Mounting bracket (for lateral fixing of the box)

Art. no. 032843

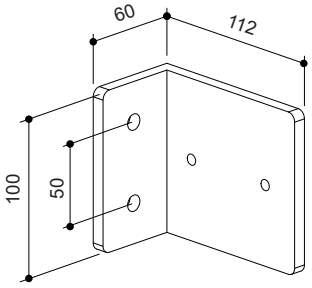

Wall holding device for box

Art. no. 032841

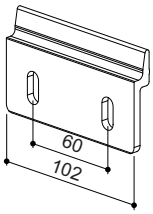

Pulley handle for front rail

Art. no. 032851

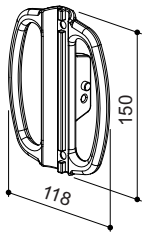

Handle holder for installation on the wall

Art. no. 032840

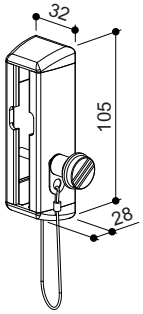

Wind and sight screens

Foundation recommendation

Pole type A

Views post type A

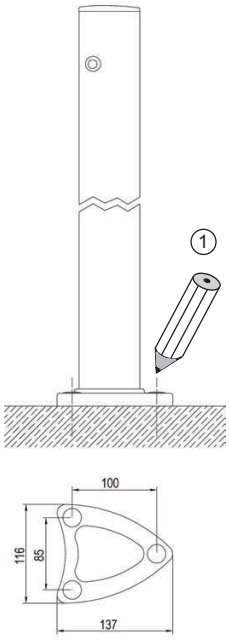

① mark three times

Floor bracket (for hammering in)
Art. no. 032856

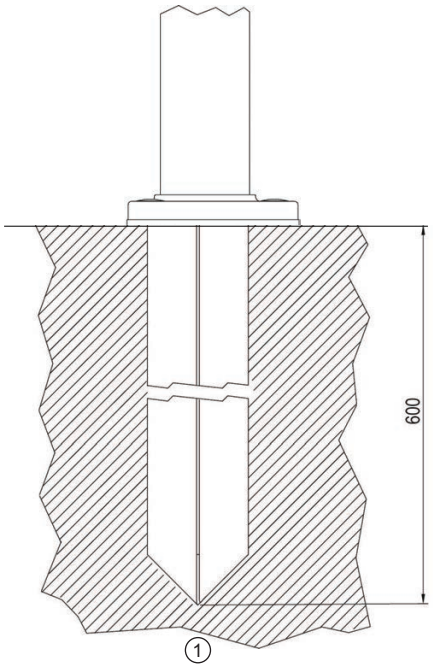

① Hammer in the bracket

Floor bracket (for setting in concrete)
Art. no. 032846

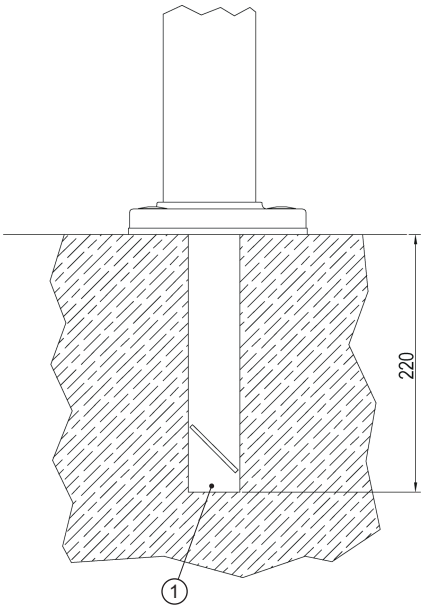

① Concrete bracket

Pole type B

Views pole type B

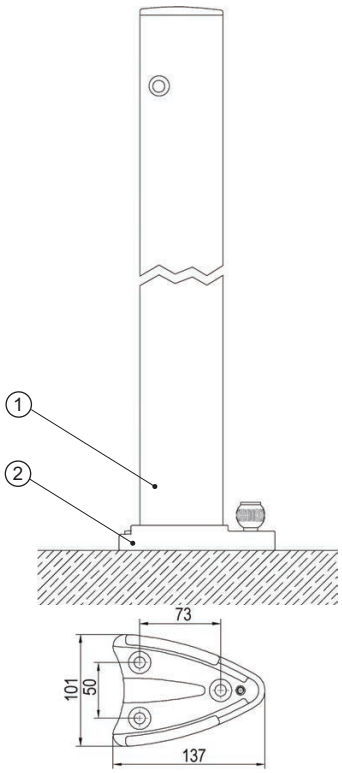

① Pole type B
② Quick-release fastener base plate

Floor bracket (for hammering in)
Art. no. 032856

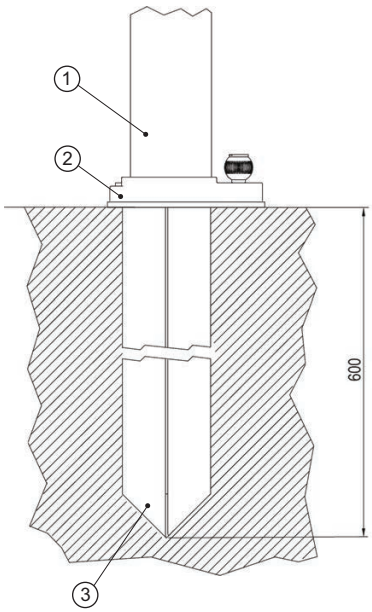

① Pole type B
② Base plate quick-release fastener
③ Hammer in the bracket

Floor bracket (for setting in concrete)
Art. no. 032847

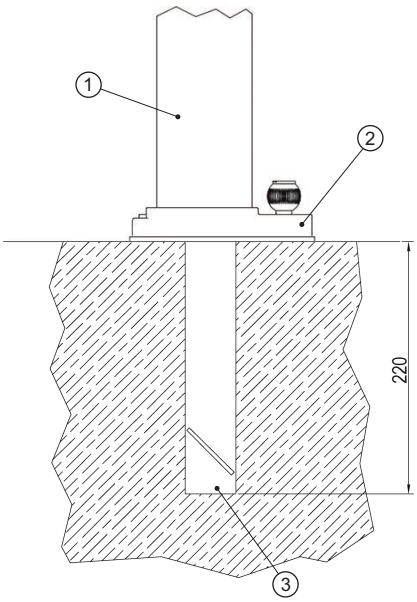

① Pole type B
② Base plate quick-release fastener
③ Concrete bracket

Installation location and dimensioning instructions

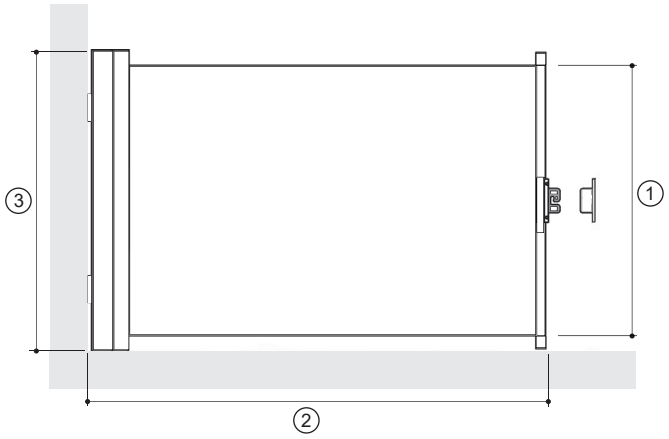

Legend

① Cover = 1200 mm or 1800 mm
② Maximum length 4000 mm
③ Height = 1300 mm or 1900 mm

Subject to change – Date of issue August 2026

OVER-GLASS AWNINGS

Type overview

SOLEYA / SOLEYA protect over-glass



	SOLEYA	SOLEYA protect
Product type	Over-glass awning	Over-glass awning/side-seam guided
Min. width [mm]		
Projection <4500 mm	1420*	1420*
Projection >4500 mm	1750	1750
Max. width [mm]		
Single unit	6000	6000
Combination	24000	24000
Paired units	10000	10000
Max. sloping projection [mm]		
Single unit	6500*	6000*
Combination	6500	6000
Paired units	4500	4500
Max. area		
Single unit	30	26
Combination	120	104
Paired units	45	45
Drive system		
Motor	o	o
Motor with radio control	+	+
Frame colors (RAL)		
Standard colors	o	o
"MULTICOLOR"	+	+
"HWF"	+	+
"1000 COLORS"	+	+
Light/heating		
LED	-	-
Infrared heating	+	+

Legend

o Included in the delivery
\+ Surcharge / price reduction
\- Not available

Legend

* Units with mini spring mechanics have a minimum width of 850 mm an a maximum sloping projection of 4500 mm.

Notes:

- The area limits by fabric must be observed per element width.
- Combinations are single units that are connected by double guide rails. Up to 4 single units can be combined.
- Paired units (pairing) are combinations of two single units with only one drive.
- Units from minimum width 850 mm to 1420 mm are provided with mini spring mechanics. Only single elements are possible here. The drive side is always on the left side.

Over-glass awning SOLEYA / SOLEYA protect

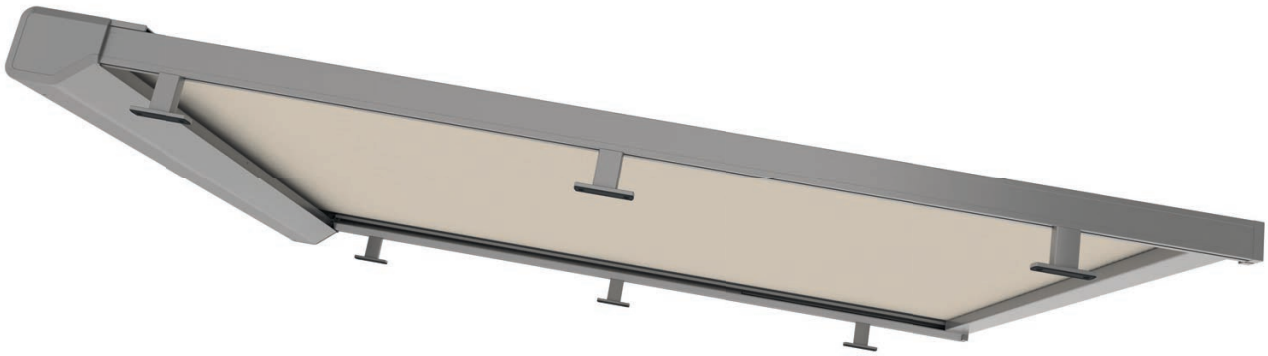

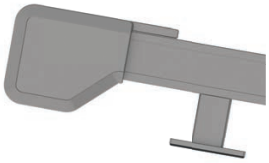

Compact box size 253x156 mm



Gap-free cover guide in the protect version.



Double guide rail for system combination.

Limit sizes

Awning

	SOLEYA	SOLEYA protect
Single unit		
Minimum width [mm]*	1420**	1420**
Maximum width [mm]	6000	6000
Maximum sloping projection [mm]*	6500	6000
Maximum area [m^2]	30	26
Combination		
Maximum width [mm]	24000	24000
Maximum sloping projection [mm]	6500	6000
Maximum area [m^2]	120	104
Paired unit		
Maximum width [mm]	10000	10000
Maximum sloping projection [mm]	4500	4500
Maximum area [m^2]	45	45

Legend

* Units with mini spring mechanics have a minimum width of 850 mm an a maximum sloping projection of 4500 mm.

** Minimum width 1750 mm for projection >4500 mm

Notes:

- The area limits by fabric must be observed per element width.
- Combinations are single units that are connected by double guide rails. Up to 4 single units can be combined.
- Paired units (pairing) are combinations of two single units with only one drive.
- Units from minimum width 850 mm to 1420 mm are provided with mini spring mechanics. Only single elements are possible here. The drive side is always on the left side.

Cover

	Acrylic fabric	Polyester fabric - PVC-free	Twilight Elements 214 Twilight Comfort 262	Twilight Pearl 297	Polyester fabric - PVC coated
SOLEYA					
Max. width [mm]	6000	6000	5000	5000	5000
Max. sloping projection [mm]	6500	6500	3400	3400	3400
Max. area [m^2]	30	30	17	17	17
SOLEYA protect					
Max. width [mm]	6000	6000	5000	5000	5000
Max. sloping projection [mm]	6000	6000	3400	3400	3400
Max. area [m^2]	26	26	17	17	17

Dimensions

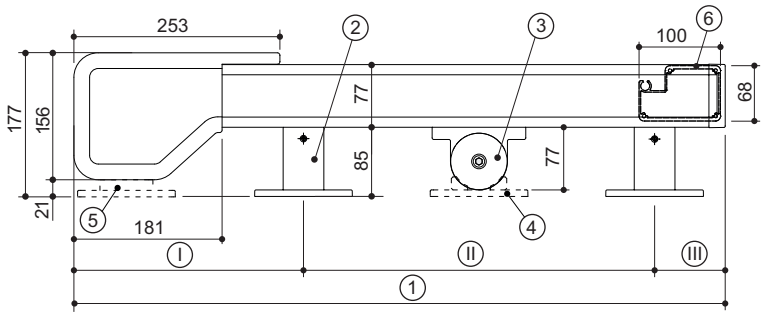

	I	II	III
min.	285	-	65
max.	350	2075	300[1] or 800[2]

Note:

1) Valid for SOLEYA protect

2) Only valid for SOLEYA up to max. spacer height 150 mm

Legend

①	Sloping projection	④	Support for guiding tube (complete width exceeds 3000 mm)
②	Guide rail holding device over-glass	⑤	Support for the box (complete width exceeds 5500 mm)
③	Conduit	⑥	Front rail 68x100 mm

Attention:

- Specification of the motor side seen from the outside. The drive system is placed on the left or right side, seen from the outside.
- Please observe the safety instruction for operation in winter.
- Exterior shadings are custom-made designs. Returns or changes are not possible.

Depending on the design and size of the elements, drives with the corresponding power are used. This can cause different speeds of rotation with adjacent units.

Scope of delivery

- SOLEYA over-glass awning with freely selectable frame color from the HELLA color world
- Large selection of glued acrylic and polyester awning fabrics
- Single unit with guide rails
- Wire-bound motor with 0.5 m of cable
- Mounting brackets for over-glass installation according to surcharge/price reduction overview
- Double guide rail for system combinations
- Guide tube size-related

Supplementary equipment

- Large selection of design variants (combination/coupling and in-line installation)
- Large selection of mounting brackets and mounting sets
- Cloths made of Allwetter, recycled polyester and SOLTIS
- UltraSeam cloths (not available for protect systems)
- ONYX or io radio motor
- Sensors for wind, sun and precipitation
- For PROTECT version with gap-free cover guide
- Additional guiding tube and additional anti-lift device respectively
- Infrared radiant heater

Benefits of the product

- Easy operation
- Heat protection
- Gap-free glare protection (with PROTECT version)
- Energy saving
- Easy installation
- Good revision possibilities

Over-glass awning SOLEYA / SOLEYA protect

Mounting accessories

Mounting bracket
Art. no. 041009E0

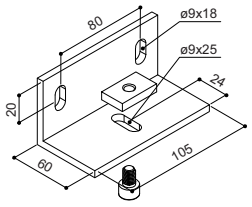

Adapter R50
Art. no. 041009E8
①= support surface R50

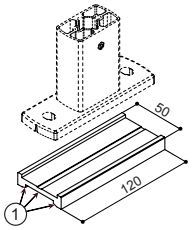

Adapter R20
Art. no. 041009E9
①= support surface R20

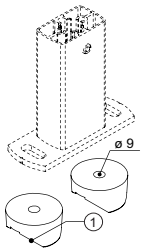

Position switch unit
Art. no. 05400257 (left)
Art. no. 05400258 (right)

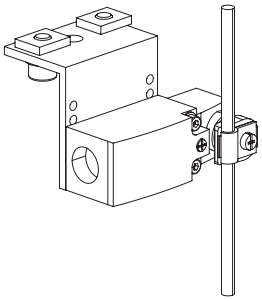

Attention: Connection cable and cable screw (M20) are not supplied.

Anti-lift device
Item no. HS
①= Axial dimension

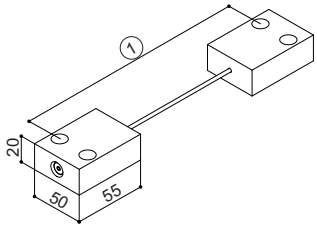

Brackets

A1-F – Standard

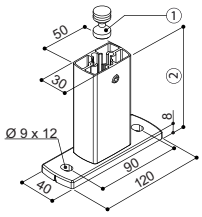

A1-FL – Standard extended slot

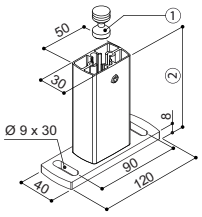

A1-FV – 5 mm axle offset

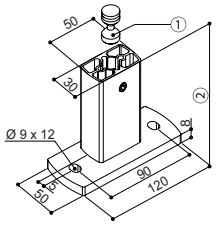

A2-F – Combination/paired

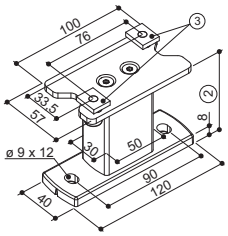

A2-FL – Combination/paired extended slot

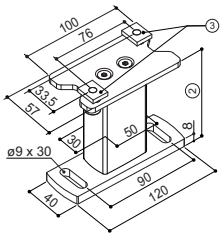

A3-F – In-line installation

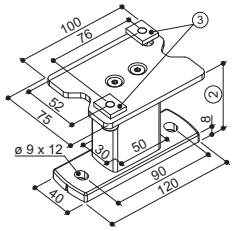

A3-FL – In-line installation extended slot

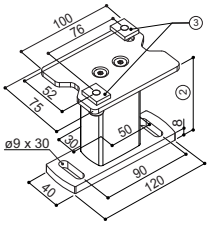

A1-S variable

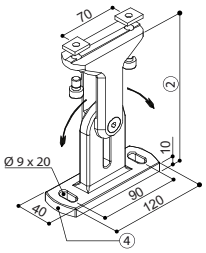

A1-SV variable 10 mm axle offset

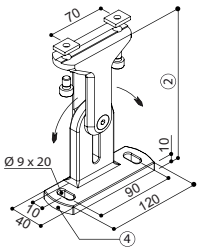

Attention: Offset complete width to axial dimension of the fastening device.

A2-S – variable/paired

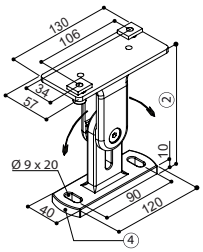

A3-S variable/in-line installation

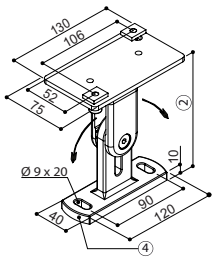

Type	Bracket height
A1-S115	115-165
A1-S168	168-216
A1-S217	217-267

Type	Bracket height
A1-SV115	115-165
A1-SV168	168-216
A1-SV217	217-267

Type	Bracket height
A2-S115	115-165
A2-S168	168-216
A2-S217	217-267

Type	Bracket height
A3-S115	115-165
A3-S168	168-216
A3-S217	217-267

Legend

① Clamping cone

② Bracket height
for A1-F, A1-FL, A1-FV, A2-F, A2-FL, A3-F, A3-FL: 85, 100, 150, 200 mm & SON (special length up to 500 mm) for A1-S, A1-SV, A2-S, A3-S: see table

③ Slot nut

④ Tilting joint foot, straight support surface

Bracket definition over-glass

Projection [mm]	to 2000	to 3000	to 4500	to 6500
Brackets per guide rail (bracket height <= 250)	2	3	3	4
Brackets per guide rail (bracket height > 250)	2	3	4	5

Over-glass awning SOLEYA / SOLEYA protect

Weight in kg depending on the width and the sloping projection

Projection [mm] \ Width [mm]	1500	2000	2500	3000	3500	4000	4500	5000	5500	6000
1500	38	45	51	58	64	71	77	84	91	97
2000	42	48	55	61	68	74	81	88	94	101
2500	44	51	58	64	71	78	84	91	98	105
3000	47	54	61	67	74	81	88	94	114	122
3500	50	57	64	71	77	84	91	98	117	125
4000	53	60	67	74	81	87	105	113	121	129
4500	56	63	70	77	93	101	108	117	125	133
5000	64	72	80	88	96	104	112	120	128	136
5500	67	75	83	91	99	107	115	123	132	
6000	74	83	92	102	111	120	129	138		
6500	77	86	95	105	114	123	132			

Notes:

- incl. brackets A1-F85
- incl. guiding tube if defined
- without LED

Taking of measurements

Front view single element

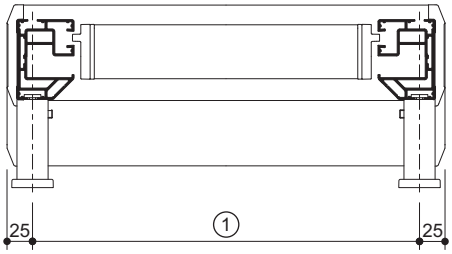

Single element in-line

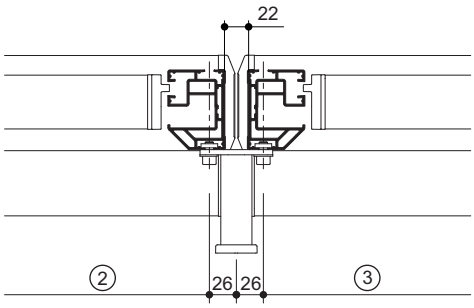

Front view combination (linkage)

Double guide rail for combination (coupling)

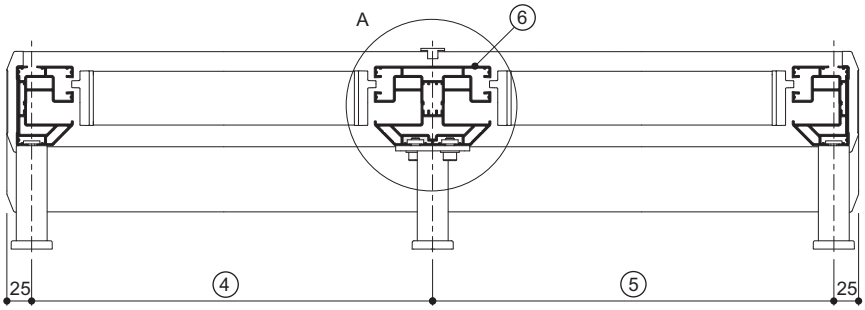

guide rail

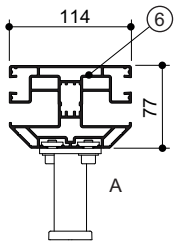

Legend

A	Combination position
①	Axial dimension single element = ordering dimension
②	Axial dimension single element 1
③	Axial dimension single element 2
④	Axial dimension combination 1
⑤	Axial dimension combination 2
⑥	Double guide rail at the combination position

Design options:

Single element (standard)

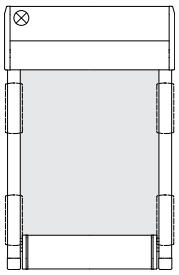

Single element in-line

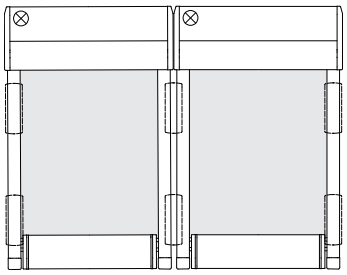

Linkage (combination 2-part, 1 drive)

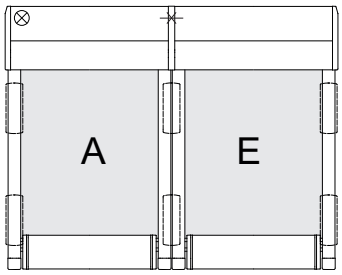

Combination of single elements (one separate drive per field)

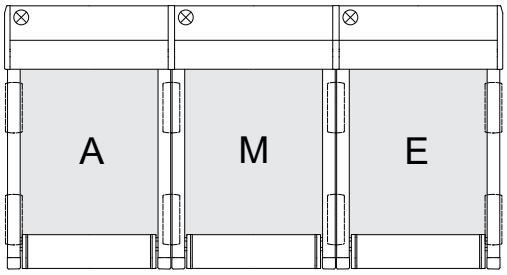

Combination of single elements and linked elements

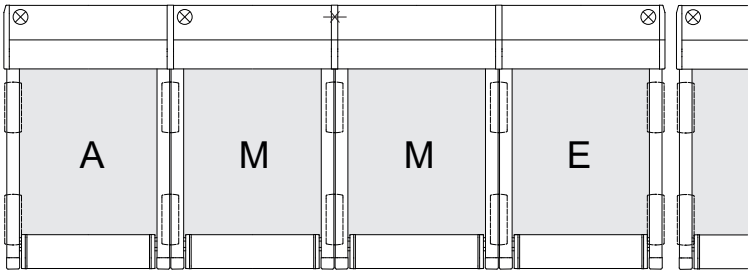

Attention:
Combinations are limited to 4 fields at a maximum!

Legend

⊗ Drive system
⊹ Linkage
A Start element combination
M Middle element combination
E End element combination

UNDER-GLASS AWNINGS

Type overview

SOLANYA protect under-glass



SOLEYA / SOLEYA protect under-glass



	SOLANYA protect	SOLEYA	SOLEYA protect
Product type	Under-glass awning/side-seam guided	Under-glass awning	Under-glass awning/side-seam guided
Min. width [mm]			
Projection <4500 mm	1420*	1420*	1420*
Projection >4500 mm	-	1750	1750
Max. width [mm]			
Single unit	5000	6000	6000
Combination	20000	24000	24000
Paired units	10000	10000	10000
Max. sloping projection [mm]			
Single unit	4500*	6500*	6000*
Combination	4500	6500	6000
Paired units	4500	4500	4500
Max. area			
Single unit	22.5	30	26
Combination	90	120	104
Paired unit	40	45	45
Drive system			
Motor	o	o	o
Motor with radio control	+	+	+
Frame colors (RAL)			
Standard colors	o	o	o
"MULTICOLOR"	+	+	+
"HWF"	+	+	+
"1000 COLORS"	+	+	+
Light/heating			
LED	-	+	+
Infrared heating	+	+	+

Legend

o Included in the delivery
\+ Surcharge / price reduction
\- Not available

Legend

* Units with mini spring mechanics have a minimum width of 850 mm an a maximum sloping projection of 4500 mm.

Notes:

- The area limits by fabric must be observed per element width.
- Combinations are single units that are connected using combination brackets. Up to 4 single units can be combined.
- Paired units (pairing) are combinations of two single units with only one drive.
- Units from minimum width 850 mm to 1420 mm are provided with mini spring mechanics. Only single elements are possible here. The drive side is always on the left side.

SOLANYA protect under-glass awning

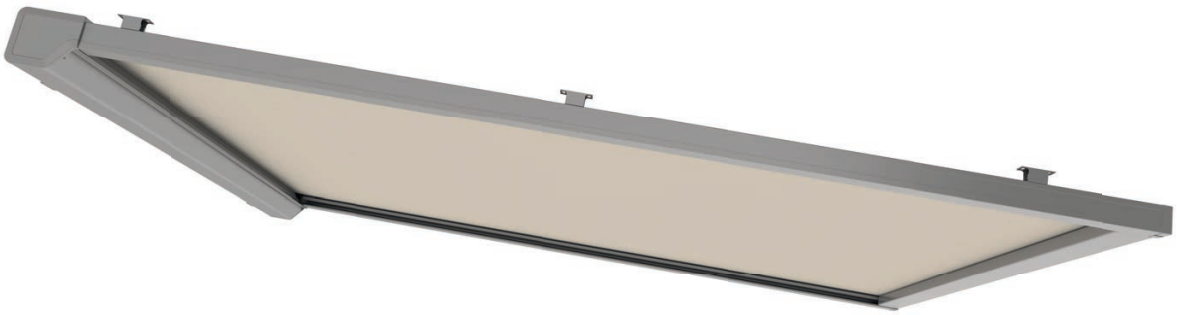

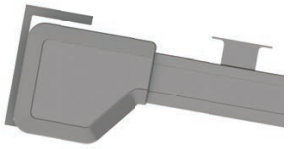

Compact box size 151 x 131 mm

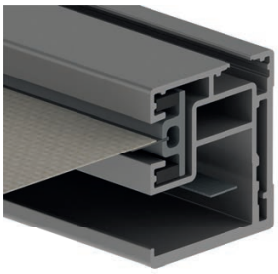

Gap-free cover guide

Limit sizes

Awning

	SOLANYA protect
Single unit	
Minimum width [mm]*	1420
Maximum width [mm]	5000
Maximum sloping projection [mm]*	4500
Maximum area [m^2]	22.5
Combination	
Maximum width [mm]	20000
Maximum sloping projection [mm]	4500
Maximum area [m^2]	90
Paired unit	
Maximum width [mm]	10000
Maximum sloping projection [mm]	4500
Maximum area [m^2]	40

Legend

* Units with mini spring mechanics have a minimum width of 850 mm an a maximum sloping projection of 4500 mm.

Notes:

- The area limits by fabric must be observed per element width.
- Combinations are single units that are connected using combination brackets. Up to 4 single units can be combined.
- Paired units (pairing) are combinations of two single units with only one drive.
- Units from minimum width 850 mm to 1420 mm are provided with mini spring mechanics. Only single elements are possible here. The drive side is always on the left side.

Cover

	Acrylic fabric	Polyester fabric - PVC-free	Twilight Elements 214 Twilight Comfort 262	Twilight Pearl 297	Polyester fabric - PVC coated
Max. width [mm]	5000	5000	5000	5000	5000
Max. sloping projection [mm]	4500	4500	3400	3400	3400
Max. area [m^2]	22.5	22.5	17	17	17

Dimensions

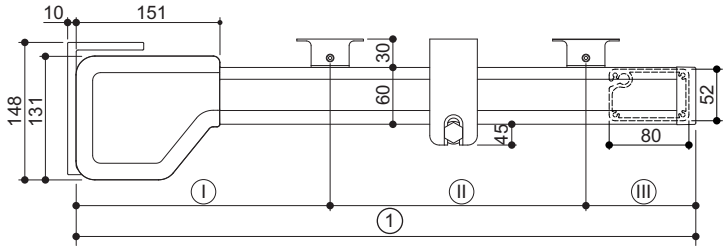

	I	II	III
min.	200	-	65
max.	300	2118	300

Legend

① Sloping projection

Attention:

- Specification of the motor side seen from the outside. The drive system is placed on the left or right side, seen from the outside.
- Exterior shadings are custom-made designs. Returns or changes are not possible.

Depending on the design and size of the elements, drives with the corresponding power are used. This can cause different speeds of rotation with adjacent units.

Scope of delivery

- SOLANYA protect under-glass awning with side-seam guide and counter-tension system, and freely selectable frame color from the HELLA Color worlds
- Large selection of glued acrylic and polyester awning fabrics
- Single unit with guide rails
- Wire-bound motor with 0.5 m of cable
- Mounting brackets for under-glass installation according to additional charges/price reduction overview
- Cover supporting wire size-related
- Gap-free cover guide

Supplementary equipment

- Large selection of design variants (combination/paired and in-line installation)
- Large selection of mounting brackets and mounting sets
- Covers made from All-weather, recycled polyester and SOLTIS
- ONYX or io wireless motor
- Sensors for wind, sun and precipitation
- Infrared radiant heater

Benefits of the product

- Easy operation
- Heat protection
- Gap-free glare protection
- Energy saving
- Easy installation
- Good revision possibilities

SOLANYA protect under-glass awning

Mounting bracket
Art. no. 04210512
UK 30/40

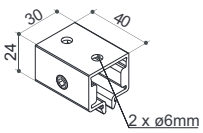

Assembly bracket 50x50 mm
Art. no. 04210524
MWL 30

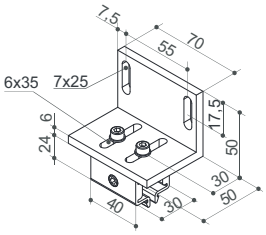

Assembly bracket 80x60 mm
Art. no. 04210525
MWL 60

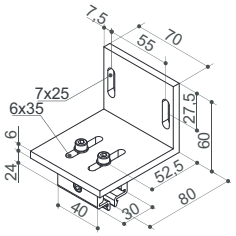

Mounting bracket
Art. no. 04210526
MWV 30 *

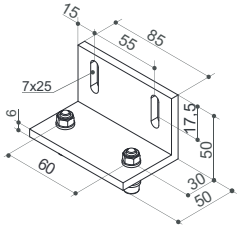

Mounting bracket motor console
Art. no. 04210527
MWV 60 *

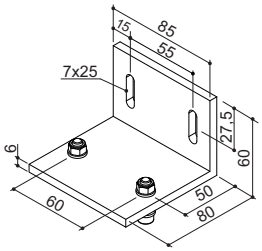

Mounting bracket axle offset 12 mm
Art. no. 04210533
FV 12

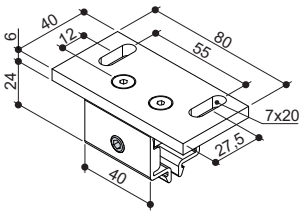

Mounting bracket axle offset 30 mm
Art. no. 04210534
FV 30

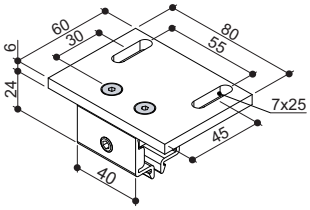

Mounting bracket axle offset 65 mm
Art. no. 04220509
FV 65

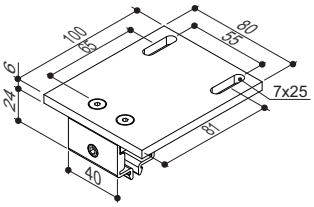

Angle bracket for support wires for the cover
Art. no. 04220511
① 110 mm

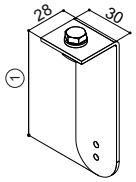

* can only be used in conjunction with distance brackets U1-F80/130, U2-F80/130, U3-F80/130

U1-F30

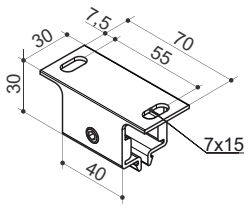

U2-F30
Combination/paired

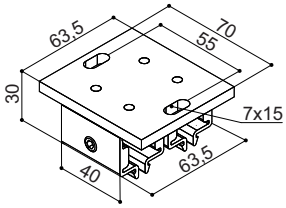

U3-F30
In-line installation

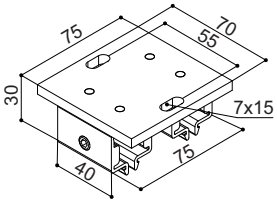

WU-120
Wall installation

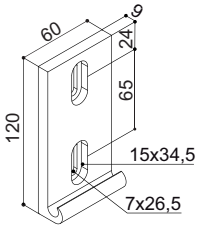

U1-F80 / U1-F130

① 80, 130

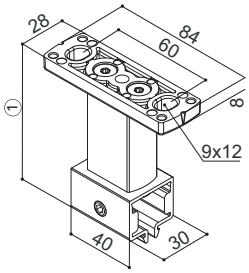

U2-F80 / U2-F130
Combination/paired

① 80, 130

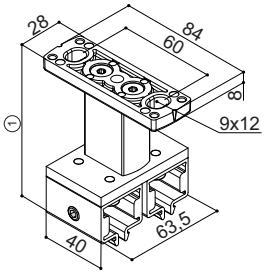

U3-F80 / U3-F130
In-line installation

① 80, 130

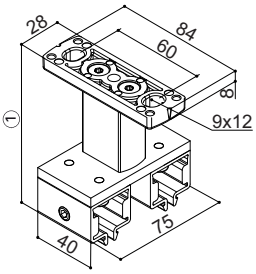

DU-143
Ceiling installation

① 143
② Spacer plate 80 x 60 x 3
③ DU-140

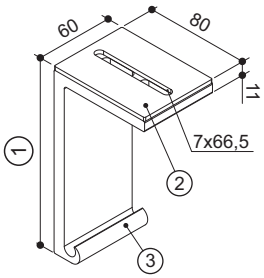

DU-200
Ceiling installation

① 200

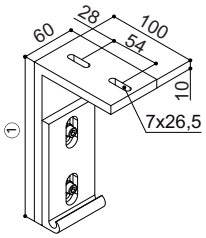

DU-250
Ceiling installation

① 250

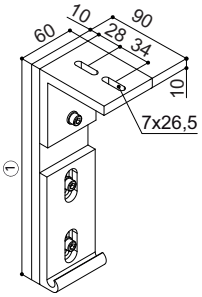

TU-135 / TU-185 / TU-235
Tensioner for the cover supporting wire

① Axial dimension
② 135, 185, 235

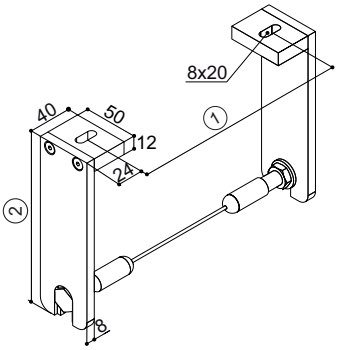

Bracket definition under-glass

Projection [mm]	to 2000	to 3000	to 4500
Brackets per guide rail (bracket height <= 250)	2	3	3
Brackets per guide rail (bracket height > 250)	2	3	4

SOLANYA protect under-glass awning

Taking of measurements

Front view single element

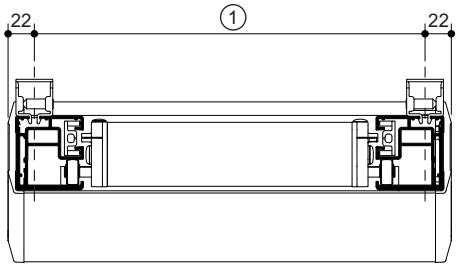

Single element in-line

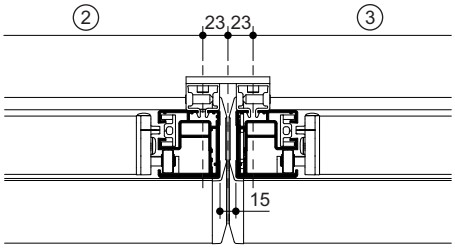

Front view combination (pairing)

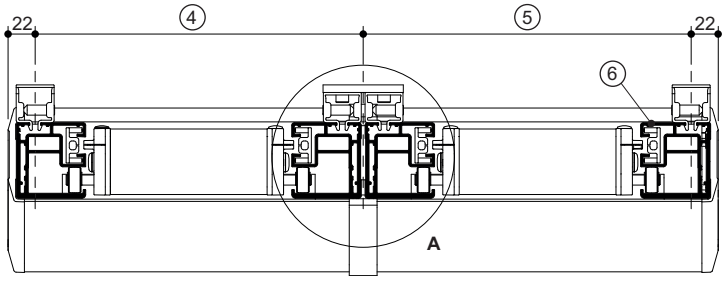

Guide rail

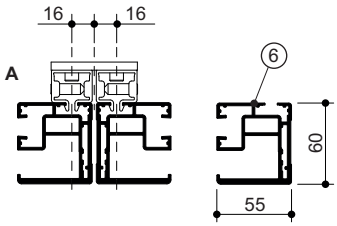

Legend

A	Combination position	④	Axial dimension combination 1
①	Axial dimension single element = ordering dimension	⑤	Axial dimension combination 2
②	Axial dimension single element 1	⑥	Single guide rail with combination
③	Axial dimension single element 2		

Under-glass awning SOLEYA / SOLEYA protect

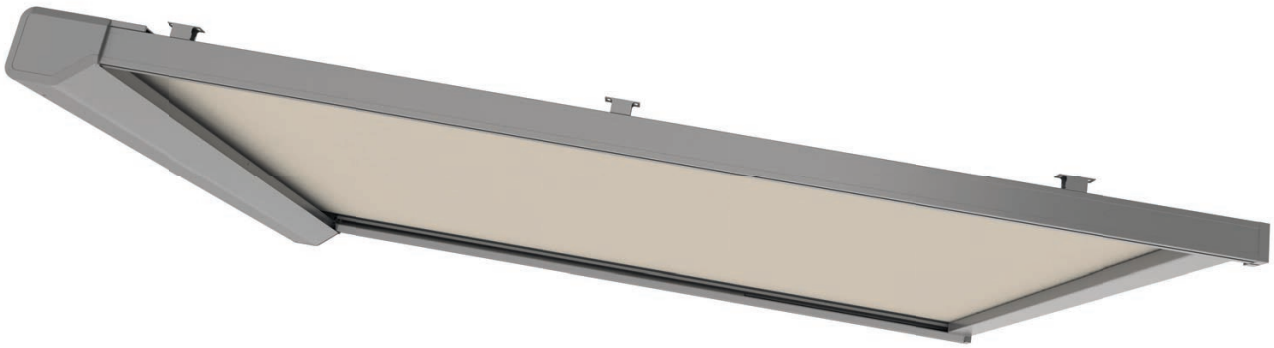

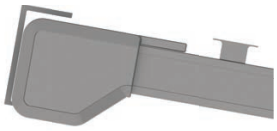

Compact box size 253x156 mm with optional LED



Gap-free cover guide in the protect version.

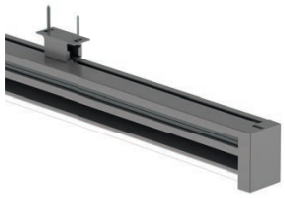

Guide rail with optional LED

Limit sizes

Awning

	SOLEYA	SOLEYA protect
Single unit		
Minimum width [mm]*	1420**	1420**
Maximum width [mm]	6000	6000
Maximum sloping projection [mm]*	6500	6000
Maximum area [m^2]	30	26
Combination		
Maximum width [mm]	24000	24000
Maximum sloping projection [mm]	6500	6000
Maximum area [m^2]	120	104
Paired unit		
Maximum width [mm]	10000	10000
Maximum sloping projection [mm]	4500	4500
Maximum area [m^2]	45	45

Legend

* Units with mini spring mechanics have a minimum width of 850 mm an a maximum sloping projection of 4500 mm.

** Minimum width 1750 mm for projection >4500 mm

Notes:

- The area limits by fabric must be observed per element width.
- Combinations are single units that are connected using combination brackets. Up to 4 single units can be combined.
- Paired units (pairing) are combinations of two single units with only one drive.
- Units from minimum width 850 mm to 1420 mm are provided with mini spring mechanics. Only single elements are possible here. The drive side is always on the left side.

Cover

	Acrylic fabric	Polyester fabric - PVC-free	Twilight Elements 214 Twilight Comfort 262	Twilight Pearl 297	Polyester fabric - PVC coated
SOLEYA					
Max. width [mm]	6000	6000	5000	5000	5000
Max. sloping projection [mm]	6500	6500	3400	3400	3400
Max. area [m^2]	30	30	17	17	17
SOLEYA protect					
Max. width [mm]	6000	6000	5000	5000	5000
Max. sloping projection [mm]	6000	6000	3400	3400	3400
Max. area [m^2]	26	26	17	17	17

Dimensions

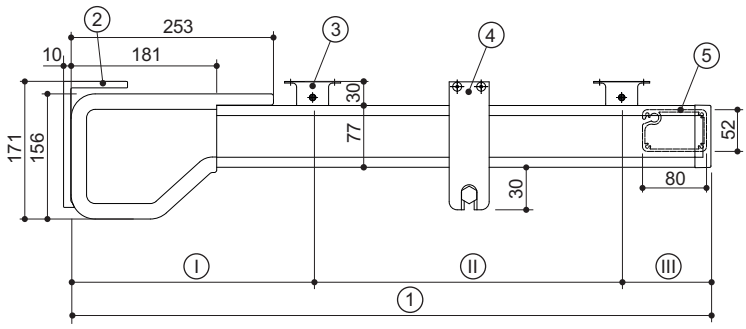

	I	II	III
min.	300	-	65
max.	350	2068	300

Legend

①	Sloping projection	④	Cover supporting wire
②	Box bracket	⑤	Front rail 52x80 mm
③	Guide rail holding device under-glass		

Attention:

- Specification of the motor side seen from the outside. The drive system is placed on the left or right side, seen from the outside.
- Exterior shadings are custom-made designs. Returns or changes are not possible.

Depending on the design and size of the elements, drives with the corresponding power are used. This can cause different speeds of rotation with adjacent units.

Scope of delivery

- SOLEYA under-glass awning with freely selectable frame color from the HELLA color world
- Large selection of glued acrylic and polyester awning fabrics
- Single unit with guide rails
- Wire-bound motor with 0.5 m of cable
- Mounting brackets for under-glass installation according to surcharge/price reduction overview
- Cover supporting wire size-related

Supplementary equipment

- Large selection of design variants (combination/coupling and in-line installation)
- Large selection of mounting brackets and mounting sets
- Cloths made of Allwetter, recycled polyester and SOLTIS
- UltraSeam cloths (not available for protect systems)
- ONYX or io radio motor
- Sensors for wind, sun and precipitation
- As an option, LED lighting can be integrated in the cassette profile and in the guide rails
- For protect version with gap-free cover guide
- Infra-red radiant heater

Benefits of the product

- Easy operation
- Heat protection
- Gap-free glare protection (with protect version)
- Energy saving
- Easy installation
- Good revision possibilities

Under-glass awning SOLEYA / SOLEYA protect

Mounting accessories

Mounting bracket
Art. no. 04210512
UK 30/40

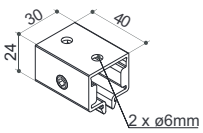

Assembly bracket 50x50 mm
Art. no. 04210524
MWL 30

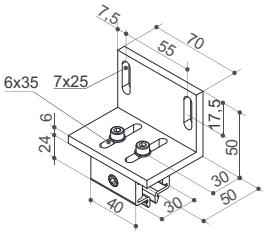

Assembly bracket 80x60 mm
Art. no. 04210525
MWL 60

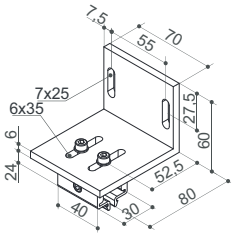

Mounting bracket
Art. no. 04210526
MWV 30 *

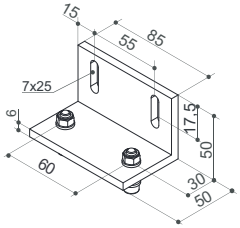

Mounting bracket motor console
Art. no. 04210527
MWV 60 *

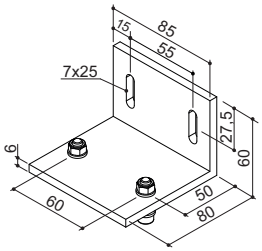

Mounting bracket axle offset 12 mm
Art. no. 04210533
FV 12

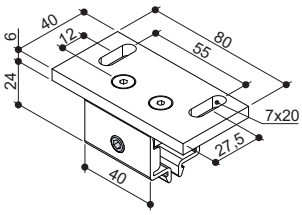

Mounting bracket axle offset 30 mm
Art. no. 04210534
FV 30

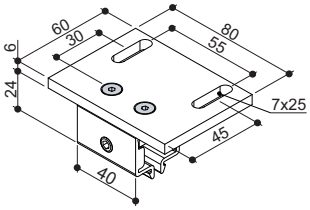

Mounting bracket axle offset 65 mm
Art. no. 04220509
FV 65

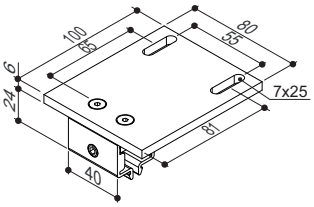

Angle bracket for support wires for the cover
Art. no. 04220511
① 110 mm

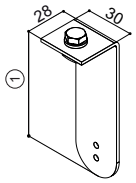

* can only be used in conjunction with distance brackets U1-F80/130, U2-F80/130, U4-F80/130

Brackets

U1-F30

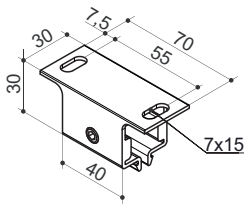

U2-F30
Combination/paired

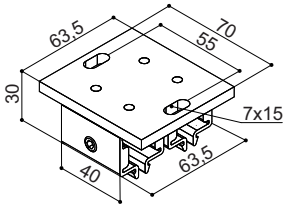

U4-F30
In-line installation

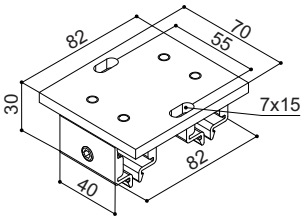

WU-120
Wall installation

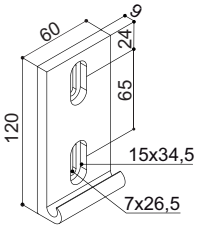

U1-F80 / U1-F130

① 80, 130

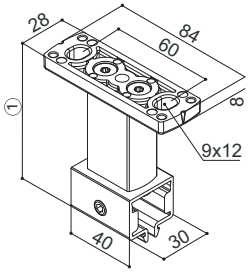

U2-F80 / U2-F130
Combination/paired

① 80, 130

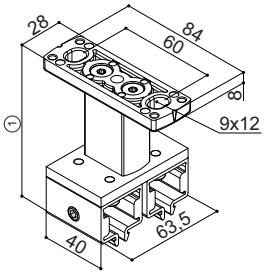

U4-F80 / U4-F130
In-line installation

① 80, 130

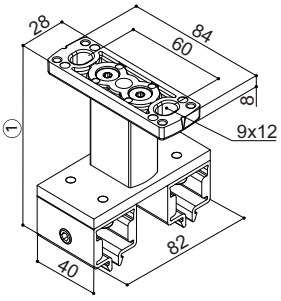

DU-157
Ceiling installation

① 157

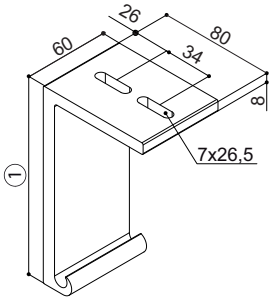

DU-200
Ceiling installation

① 200

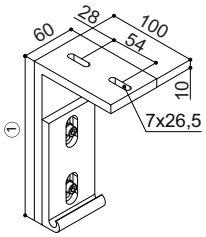

DU-250
Ceiling installation

① 250

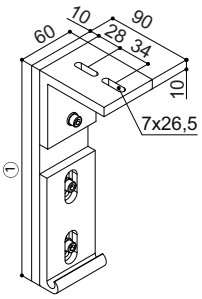

TU-135 / TU-185 / TU-235
Tensioner for the cover supporting wire

① Axial dimension
② 135, 185, 235

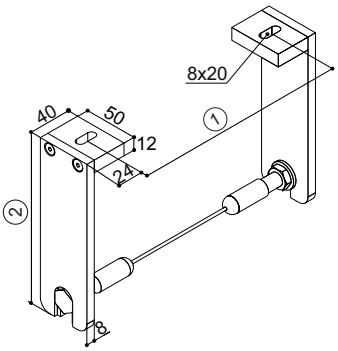

Bracket definition under-glass

Projection [mm]	to 2000	to 3000	to 4500	to 6500
Brackets per guide rail (bracket height <= 250)	2	3	3	4
Brackets per guide rail (bracket height > 250)	2	3	4	5

Under-glass awning SOLEYA / SOLEYA protect

Weight in kg depending on the width and the sloping projection

Projection [mm] \ Width [mm]	1500	2000	2500	3000	3500	4000	4500	5000	5500	6000
1500	35	41	47	53	58	64	70	76	81	87
2000	38	44	50	56	62	67	73	79	85	91
2500	41	47	53	59	65	71	77	83	88	94
3000	44	50	56	62	68	74	80	86	92	98
3500	47	53	59	65	71	77	83	89	95	102
4000	50	56	62	68	74	80	86	93	99	106
4500	53	59	65	72	78	84	91	97	103	109
5000	56	62	68	75	81	87	94	100	107	113
5500	59	65	71	78	84	90	97	104	110	
6000	62	68	74	81	87	94	101	107		
6500	64	71	77	84	90	97	104			

Notes:

- incl. brackets U1-F30
- incl. cover support wire if defined
- without LED

Taking of measurements

Front view single element

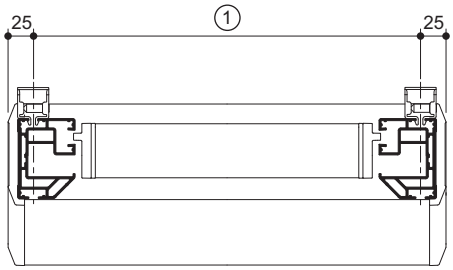

Single element in-line

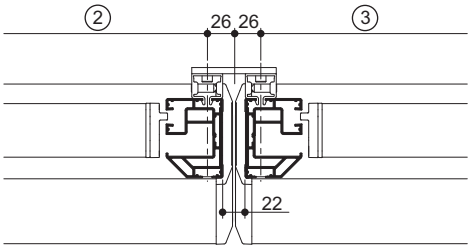

Front view combination (linkage)

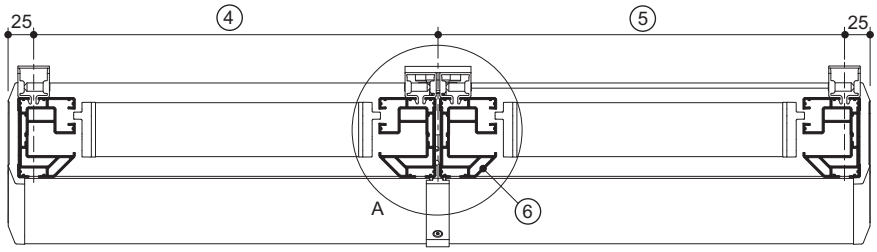

Guide rail

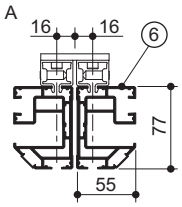

Legend

A	Combination position
①	Axial dimension single element = ordering dimension
②	Axial dimension single element 1
③	Axial dimension single element 2
④	Axial dimension combination 1
⑤	Axial dimension combination 2
⑥	Single guide rail at the combination position

Design options:

Single element (standard)

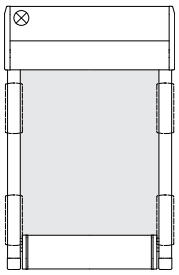

Single element in-line

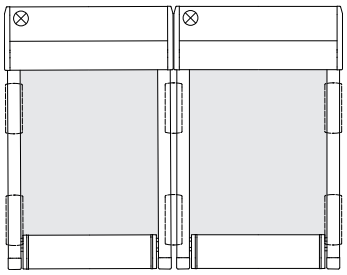

Linkage (combination 2-part, 1 drive)

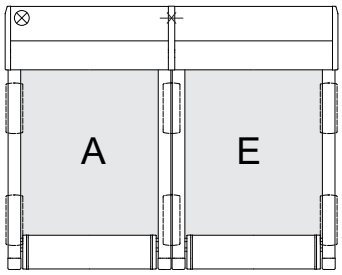

Combination of single elements (one separate drive per field)

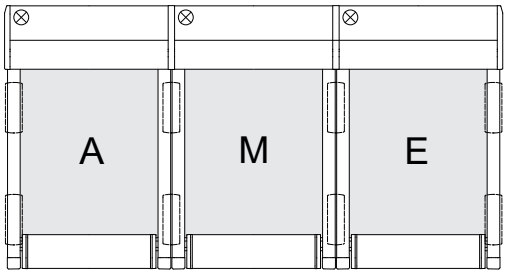

Combination of single elements and linked elements

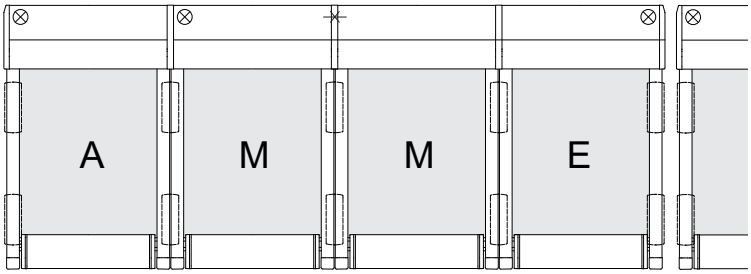

Attention:
Combinations are limited to 4 fields at a maximum!

Legend

- ⊗ Drive system
- ⊹ Linkage
- A Start element combination
- M Middle element combination
- E End element combination

Under-glass awning SOLEYA / SOLEYA protect

LED lighting

LED in the box

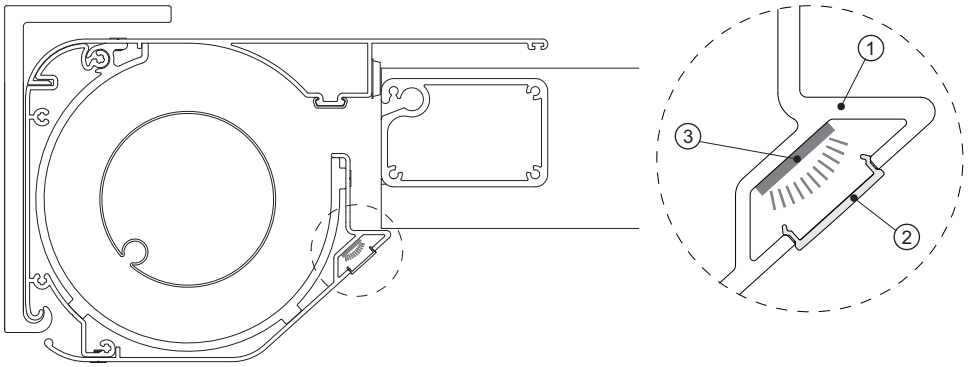

LED in the guide rails

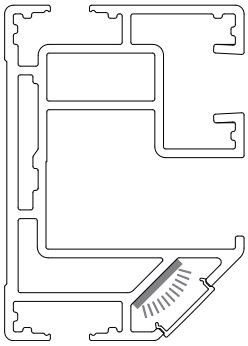

Technical data LED stripes:

- Light color 2700 K (warm-white)
- Voltage 6.2 W/m - 24V
- 650 Lumen/m, 240 LED/m
- Ambient temperature -20°C to + 45°C
- Color rendering index Ra > 90
- User-defined dimmable light intensity

Operation only possible with **ONYX** or **Somfy radio io** !

Combination possibilities

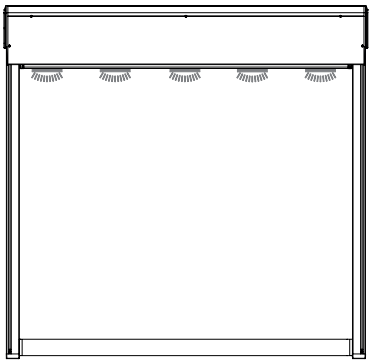

LED in the box only

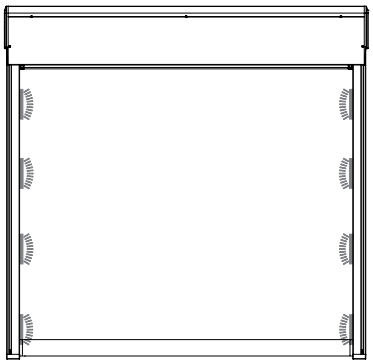

LED in the guide rails only

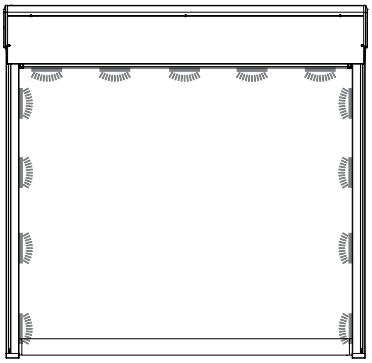

LED in the box and in the guide rails

Legend

① Box profile
② satinised profile
③ LED stripes

Housing control unit for LED

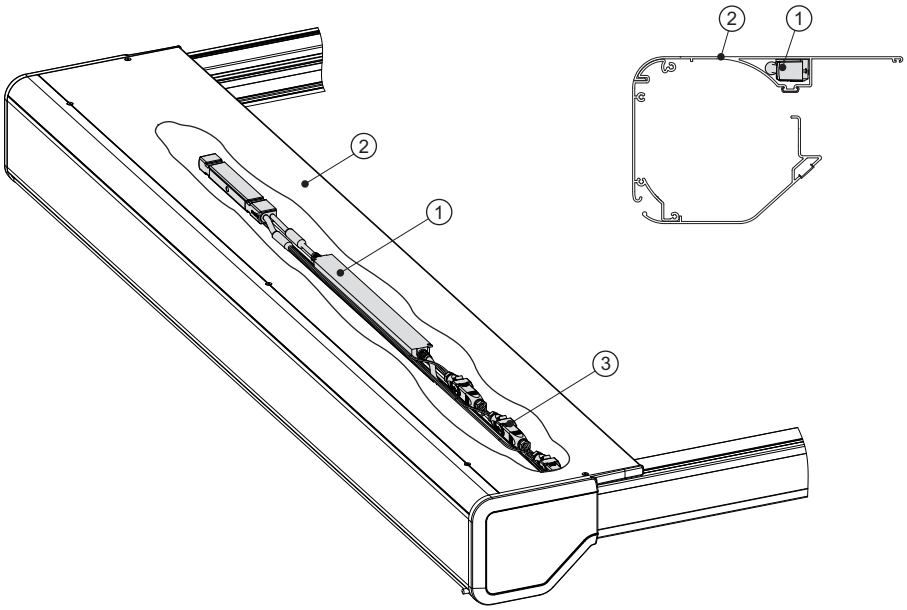

The control unit for the LED lighting is stowed in the channel of the roof profile ② and thus not visible from the outside. The individual LED stripes of the guide rails and the box are connected to the LED control unit with Hirschmann plug connection STAS 2 / STAK 2. The Hirschmann plug connection are stowed in the channel of the roof profile, too.

Legend

① LED control unit (Somfy or ONYX)
② Roof profile
③ Hirschmann plug connection

PERGOLA AWNINGS

Type overview

ELEGANZA / ELEGANZA protect



	ELEGANZA	ELEGANZA protect
Max. dimensions		
Max. complete width [mm]	6000	6000
Max. sloping projection [mm]	5500	5500
Max. height [mm]	3000	3000
Max. surface [m²]	30	26
Combinable	+	+
Design	Pergola awning	Pergola awning
Structure	The construction is completely made of stable, extruded aluminium profiles and components made of stainless steel, which guarantee an easy installation and high functionality of the system.	
Roof	retractable textile awning	
Roof pitch	2° - 30° < 8° (no rain shelter)	2° - 30° < 8° (no rain shelter)
Defined drip cap	-	-
Drive system:		
Motor	o	o
Operation	Hand-held/wall-mounted radio transmitter, smart phone, tablet, voice control	
Sensors		
snow	+	+
frost	+	+
Wind	+	+
Rain	+	+
Sun	+	+
Frame colors (RAL):		
Standard colors	o	o
"MULTICOLOR"	+	+
"HWF"	+	+
"1000 COLORS"	+	+
Fixing		
Self-supporting	-	-
Wall installation	o	o
Ceiling installation	+	+
Rafter	+	+
Can be integrated into the building structure	-	-
Equipment		
LED in the structure	+	+
Infrared radiant heater	+	+
Wall connection cover sheet	-	-
Rain shelter	-	-
Side closures zip-screen	-	-
Varioplus roller blind	+	+

Legend

o Included in the delivery
\+ Surcharge / price reduction
\- Not available

Pergola awning ELEGANZA / ELEGANZA protect



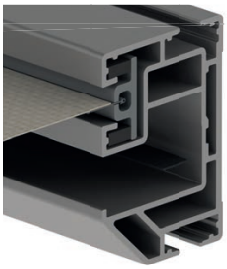

Optional gap-free cover guide for wind resistance class 3.



Rail-guided Varioplus roller blind with anti-swing device.



LED in cassette and guide rails.

Limit sizes

	ELEGANZA	ELEGANZA protect
Single unit		
Minimum width [mm] – projection <4500 mm	1420	1420
Minimum width [mm] – projection >4500 mm	1750	1750
Maximum width [mm]	6000	6000
Maximum sloping projection [mm]	5500	5500
Maximum area [m^2]	30	26

Cover

	Acrylic fabric	Polyester fabric - PVC-free	Twilight Elements 214 Twilight Comfort 262	Twilight Pearl 297	Polyester fabric - PVC coated
ELEGANZA					
Max. width [mm]	6000	6000	5000	5000	5000
Max. sloping projection [mm]	5500	5500	3400	3400	3400
Max. area [m^2]	30	30	17	17	17
ELEGANZA protect					
Max. width [mm]	6000	6000	5000	5000	5000
Max. sloping projection [mm]	5500	5500	3400	3400	3400
Max. area [m^2]	26	26	17	17	17

Note:

Definitions of the minimum slope can be found in the technical section in the chapter Pergola awning ELEGANZA/ELEGANZA protect - Definition of minimum slope.

Types of installation

Wall installation

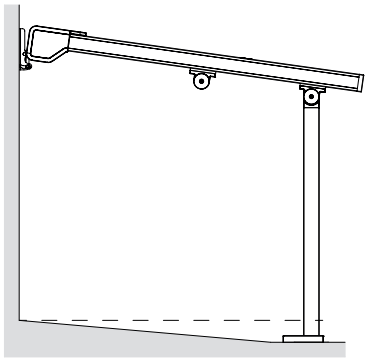

Ceiling installation

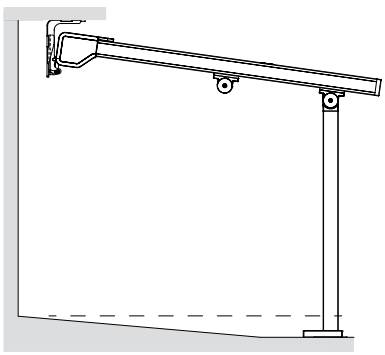

Rafter installation

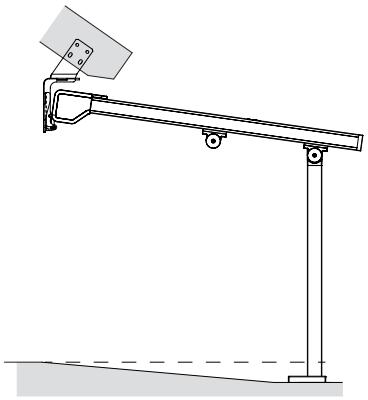

Option - Varioplus roller blind (VP)

As an option, a free-hanging or rail-guided Varioplus roller blind can be installed between the two front columns instead of the cross brace. This serves as vertical shading (sight screen/glare protection) and can be ordered for any complete width.

The Varioplus roller blind is only available in combination with fixed columns. This option is not available for units with lowerable column.

The Varioplus roller blind is always provided with a motor. The power supply for the drive is provided via the guide rails and thus discreetly hidden.

Varioplus roller blind - maximum height of roller blind [mm]

	Acrylic fabric	Polyester fabric - PVC-free	Polyester fabric - PVC coated
	2000	2000	2000

The cover width equals the Pergola awning cover. Tolerance of variations in length acc. to EN 13561.

Scope of delivery

- ELEGANZA pergola awning with freely selectable frame color from the HELLA color world
- Large selection of glued acrylic and polyester awning fabrics
- Single unit with guide rails
- Wire-bound motor with 0.5 m of cable
- Wall brackets Type A
- 2 pieces of front column (standard type)
- Transverse profile, round or square design
- Double guide rail possible for system combinations
- Guide tube size-related

Supplementary equipment

- Combination with double guide rail possible
- Mounting brackets for wall, ceiling and rafter installation
- Cloths made of Allwetter, recycled polyester and SOLTIS
- UltraSeam cloths (not available for protect systems)
- ONYX or io radio motor
- Sensors for wind, sun and precipitation
- As an option, LED lighting can be integrated in the cassette profile and in the guide rails
- Varioplus roller blind for low sun and as privacy screen. Also with rail guide as pendulum safety device.
- With crank handle provided at the lowerable column to ensure the lateral rainwater drainage
- With protect version with gap-free cover guide and eyelets for water drainage.
- Option additional guiding tube and additional anti-lift device respectively
- Infrared radiant heater

Benefits of the product

- Easy operation
- Heat protection
- Glare protection
- Sight screen
- Gap-free glare protection (with protect version)
- Energy saving
- high wind stability
- For deep terraces

Pergola awning ELEGANZA / ELEGANZA protect

Differences

ELEGANZA

- Wind protection class 2
- Inclination adjustment: 2° - 30°
- minimum width: 1420 mm, 1750 mm for sloping projection > 4500 mm
  width depending on the dimension, sloping projection up to max. 5500 mm
- Single element can be manufactured up to a width of 6000 mm
- Gap in the cover between guide rail and blind

ELEGANZA protect

- Wind protection class 3
- Inclination adjustment: 2° - 30°
- minimum width: 1420 mm, 1750 mm for sloping projection > 4500 mm
  width depending on the dimension, sloping projection up to max. 5500 mm
- Single element can be manufactured up to a width of 6000 mm
- No gap in the fabric between guide rail and blind (non-split fabric)

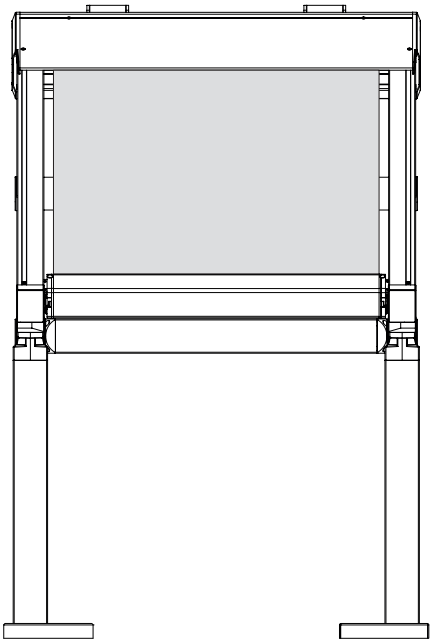

Gap in the cover between guide rail and blind

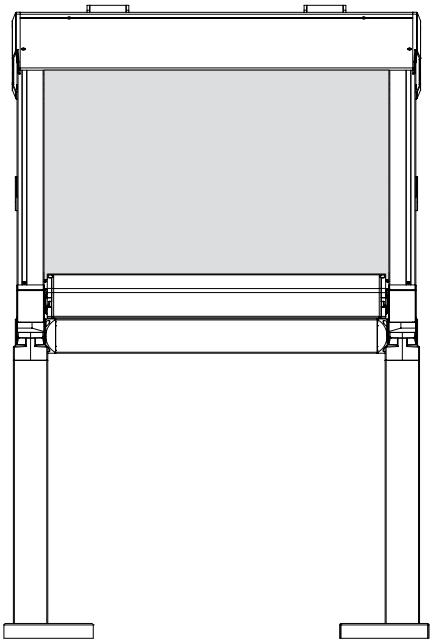

No gap in the cover between guide rail and blind

Mounting accessories

Anti-lift device
Item no. HS

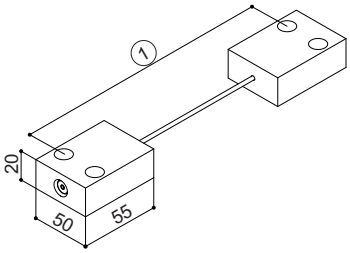

Column lowerable

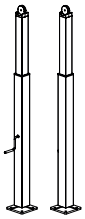

Column base - standard
Art. no. 04180509
3 Use installation sets 1 A4

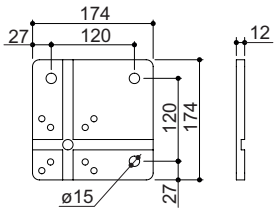

Column base for centre situation
Art. no. 04180514
4 Use installation sets 1 A4

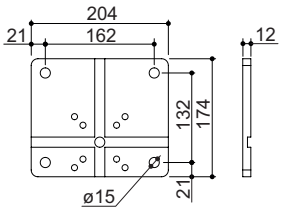

Covering cap standard for lowerable column
Dimension 86x86 mm
Art. no. 04180510

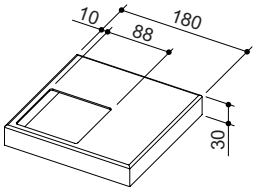

Covering cap standard
Dimension 70x70 mm
Art. no. 04180511

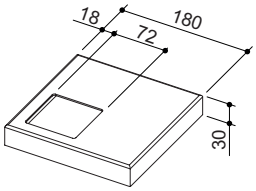

Covering cap middle situation for lowerable column
Dimension 86x86 mm
Art. no. 04180515

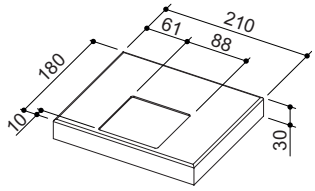

Covering cap middle situation
Dimension 70x70 mm
Art. no. 04180516

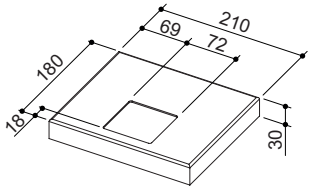

Pergola awning ELEGANZA / ELEGANZA protect

Brackets

Wall bracket type A Standard

2 installation sets

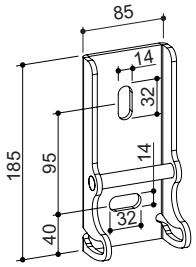

Wall bracket type C

4 installation sets

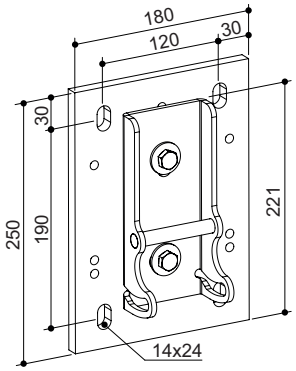

Wall bracket type D

5 installation sets

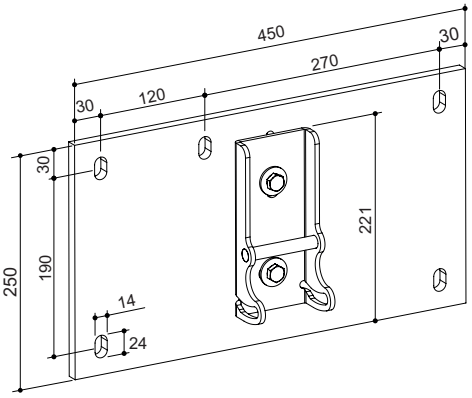

Ceiling bracket Type E

2 installation sets

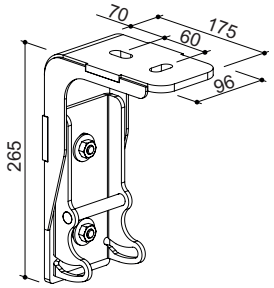

Rafter bracket Type K, left

4 installation sets

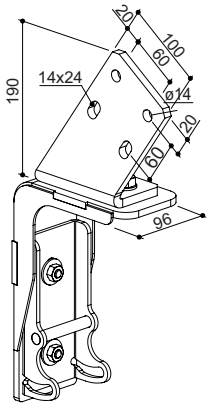

Rafter bracket Type K, right

4 installation sets

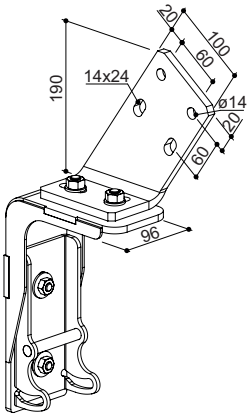

Note:

The brackets are entered via the ABKONSOLE model, which includes the mounting bracket for wall installation, box-side including accessories.

Mounting bracket for wall installation, box-side

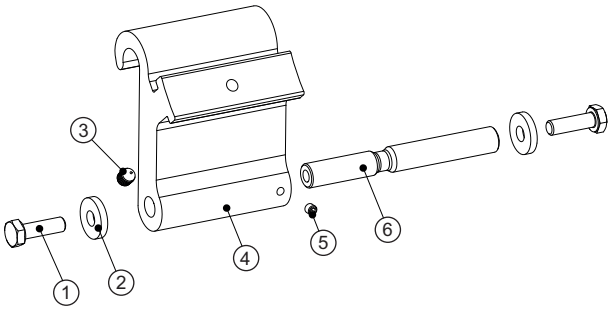

Legend

① Hexagon head screw M6x20 (art. no.: 80010208)
② Washer DIN7349 06 (art. no.: 82010052)
③ Threaded pin DIN914 06x8 (art. no.: 80010077)
④ Mounting bracket for wall installation, box-side (art. no.: 04180506)
⑤ Threaded pin DIN916 04x4 (art. no.: 80010360)
⑥ Bolt for mounting bracket for wall installation (art. no.: 04180508)

Weight in kg depending on the width and the sloping projection

Projection [mm] \ Width [mm]	1500	2000	2500	3000	3500	4000	4500	5000	5500	6000
1500	63	70	77	85	92	100	108	116	124	144
2000	65	73	80	88	96	103	112	119	127	148
2500	68	76	83	91	99	106	115	123	131	152
3000	71	79	87	94	102	110	118	126	134	155
3500	74	82	90	97	105	113	122	130	138	159
4000	77	85	93	101	108	116	125	144	153	162
4500	80	88	96	104	112	129	139	148	157	166
5000	87	96	105	114	123	132	142	151	160	169
5500	90	99	108	117	126	135	145	155	164	

Notes:

- incl. wall bracket Type A
- incl. guiding tube if defined
- inkl. Cross brace round
- Height at the front 2100 mm

Definition minimum inclination

The pergola awning ELEGANZA / ELEGANZA protect is suitable to a limited extent as **protection against rain**. For this purpose special requirements must be met:

Minimum inclination

with fixed columns (not lowerable units):

Inclination < 8°:	Unit may not be used as protection against rain
Inclination >= 8° bis 10°:	In rain, the unit may only be extended when it is attended (critical range).
Inclination > 10°:	Good range of inclination, taking into consideration the recommendation of additional guiding tubes (see chapter: Additional guiding tube or additional anti-lift device)
Inclination > 14°:	excellent range of inclination

for units with lowerable columns:

Inclination < 6°:	Unit may not be used as protection against rain
Inclination >= 6° bis 8°:	In rain, the unit may only be extended when it is attended (critical range).
Inclination > 8°:	Good range of inclination, taking into consideration the recommendation of additional guiding tubes (see chapter: Additional guiding tube or additional anti-lift device)
Inclination > 14°:	excellent range of inclination

To prevent the formation of water pockets near the front rail, two water drainage eyelets are pressed into the middle of each cover web. Thus the rain water can drain off via these punchings.

If the unit is used as protection against rain, the following limitations / notes must be strictly observed:

- It is necessary to always extend the unit completely (important to tension the cover completely).
- In case of severe weather (e.g. strong wind, hail) the unit must **always and without exception** be retractet.
  Important for units with lowerable column:
  In no case s it allowed to operate the unit when the column is lowered. Before retracting or extending the unit, the column must be cranked to the upper end position, so that the front cross profile is adjusted horizontally.
- When the ELEGANZA / ELEGANZA protect with lowerable column is used in rain, the column must be lowered completely.

Pergola awning ELEGANZA / ELEGANZA protect

Taking of measurements

Single element with column fixed (standard)

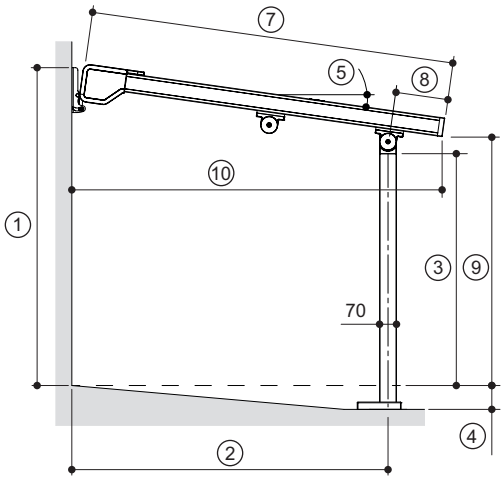

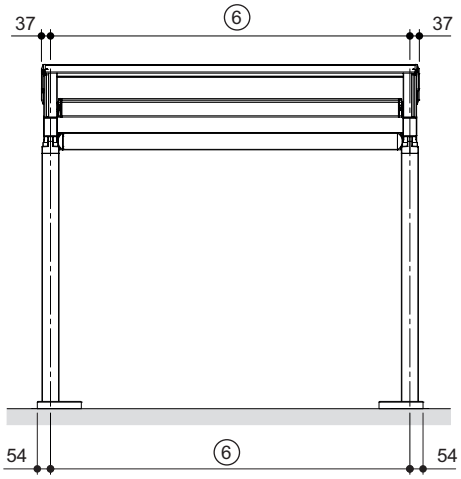

Single element with column lowerable:

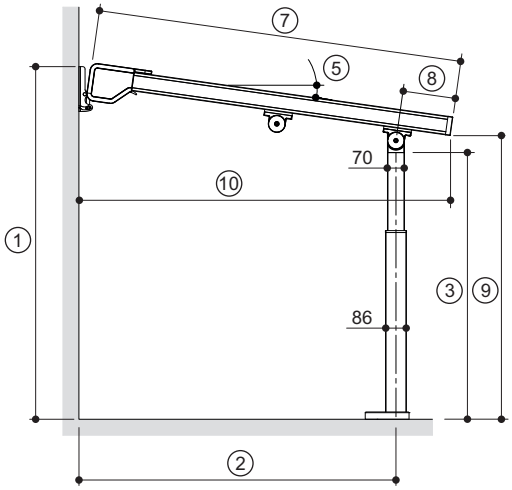

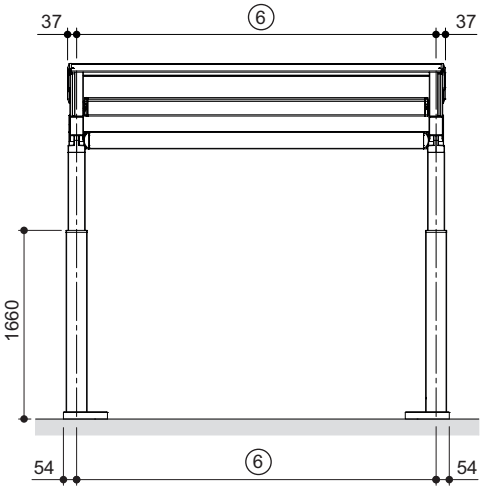

Note:

The complete width ⑥ is measured from the axial dimension of the columns. The lateral excess length of 54 mm per column must be observed when the complete width is selected.

Legend

①	Complete height (up to the upper edge of the mounting bracket)	⑥	Complete width (axial dimension columns) = ordering dimension
②	Column distance (fixing base wall up to the axle of the column)	⑦	Sloping projection diagonal (rear edge box - end cap guide rail) = ordering dimension
③	Height at the front (column height (passage height cross brace) = ordering dimension (max. 3000 mm)	⑧	Excess length guide rail (min. 100 mm, max. 500 mm)
④	Column lengthening (+/- 500 mm) only possible with column fixed	⑨	Passage height at the front Attention: May be deeper, depending on the dimensions ③
⑤	Inclination	⑩	Sloping projection horizontal

Single element for fixed column (standard) with mounting bracket type C/D

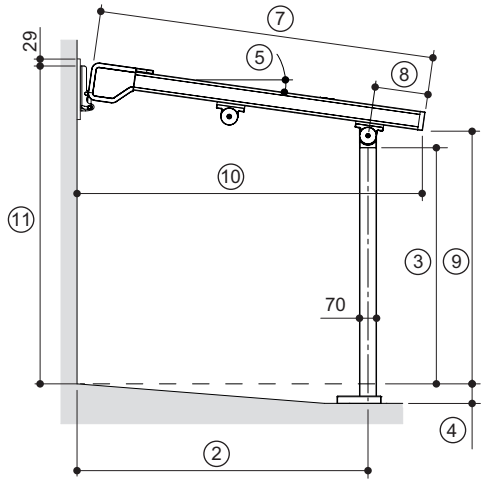

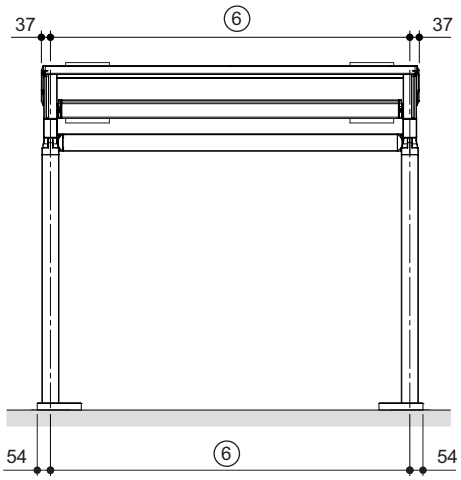

Rafter installation

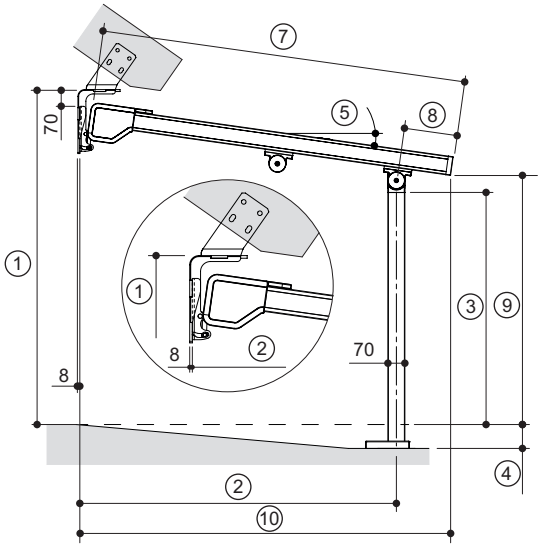

Ceiling installation

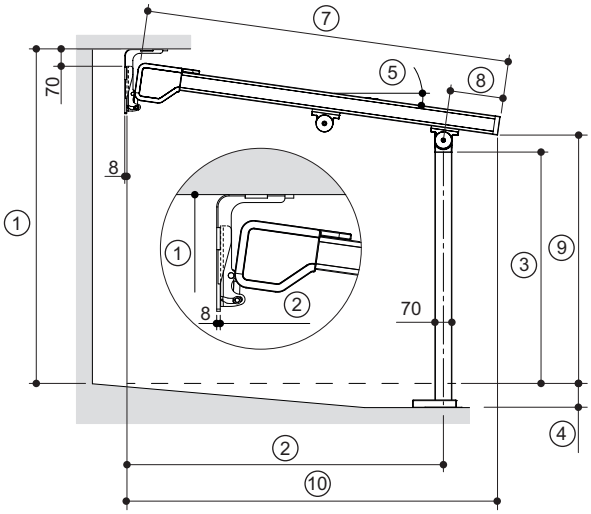

Legend

① Complete height (up to the upper edge of the ceiling bracket) = ordering dimension

② Column distance
(rear edge of the mounting bracket up to the axle of the column)

③ Height at the front (column height (passage height cross brace) = ordering dimension (max. 3000 mm)

④ Column lengthening (+/- 500 mm)
only possible with column fixed

⑤ Inclination

⑥ Complete width (axial dimension columns) = ordering dimension

⑦ Sloping projection diagonal (rear edge box - end cap guide rail) = ordering dimension

⑧ Excess length guide rail
(min. 100 mm, max. 500 mm)

⑨ Passage height at front
Note: May be deeper than (3), depending on dimensions

⑩ Sloping projection horizontal

⑪ Complete height (to upper edge of mounting bracket) = ordering dimension

Pergola awning ELEGANZA / ELEGANZA protect

Taking of measurements

System combination with column fixed (standard):

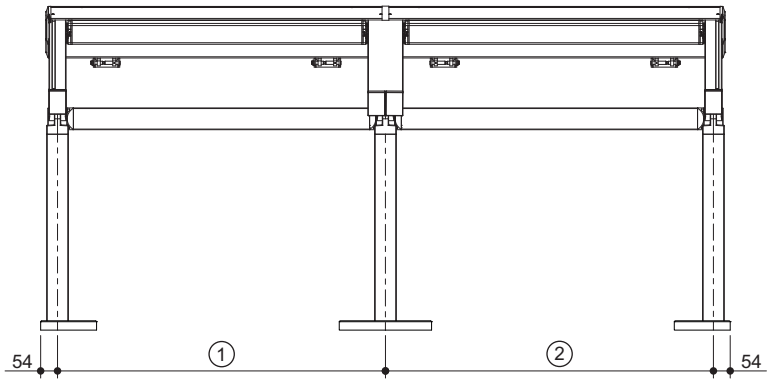

System combination with column lowerable:

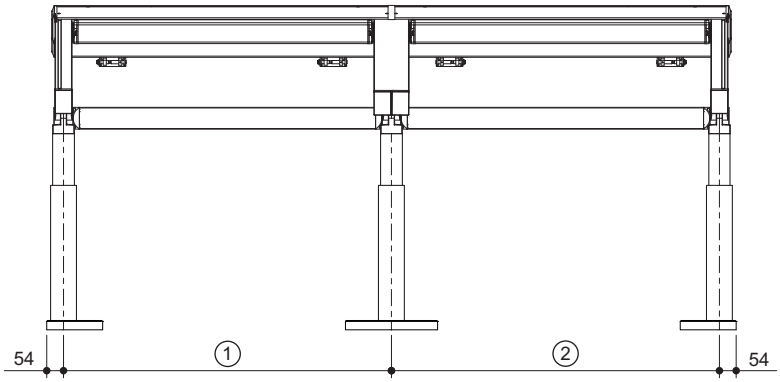

Notes:

- The other dimensions (complete height, height at the front, sloping projection,...) must be measured as described before.
- The lateral excess lengths of the mounting plates must be observed, when selecting the complete width.

Attention: Combinations are limited to 2 fields at a maximum!

Legend

① Complete width unit 1
② Complete width unit 2

Explanation for the graphic construction of the ordering dimensions sloping projection and column height

Please use our online calculator for the correct determination of the ordering dimensions!

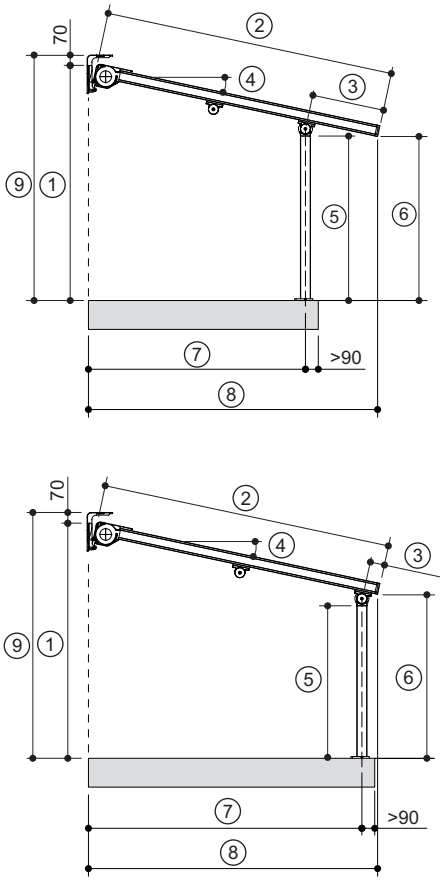

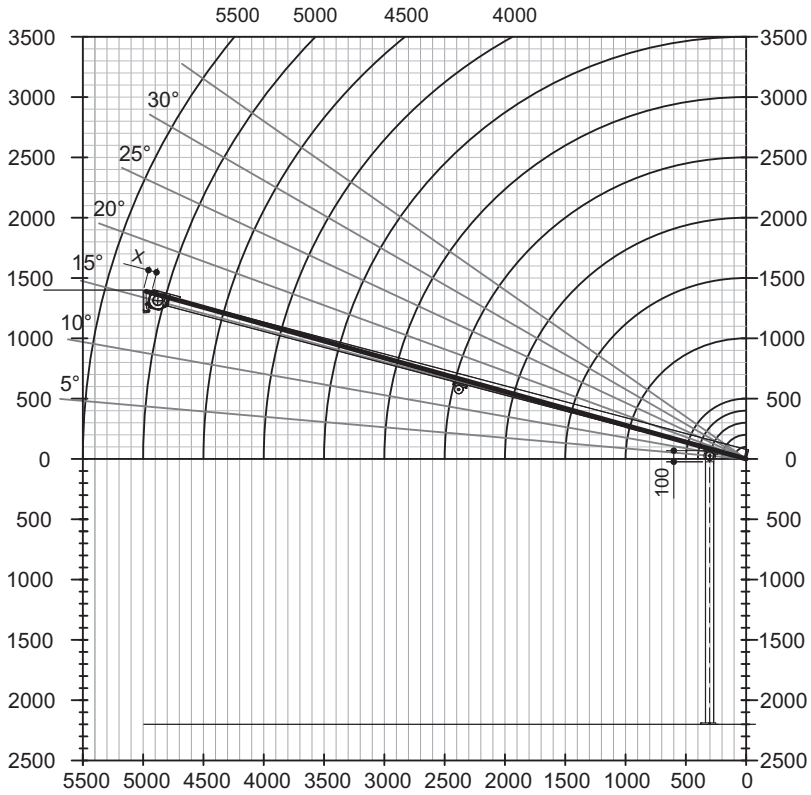

Ordering dimensions of the example drawn-in:

Sloping projection= 5150 mm
Height at the front (column height) = 2170 mm
Complete height = 3600 mm
Excess length of the guide rail = 300 mm

Legend

① Complete height wall installation (up to the upper edge of the mounting bracket) = ordering dimension
② Oblique projection
③ Excess length of the guide rail (min.100 mm, max. 500 mm)
④ Unit inclination
⑤ Height at the front (column height/passage height cross brace) (H) = ordering dimension
⑥ Passage height at the front (DH)
⑦ Column distance (SA) = ordering height
⑧ Sloping projection horizontal
⑨ Complete height ceiling installation (up to the upper edge of the ceiling bracket)

Procedure to determine the sloping projection with the help of a diagram

1. Draw-in the desired passage height (from 0 downwards - vertical origin)
2. Draw-in the desired horizontal sloping projection from the right side (origin 0) to the left side
3. Draw-in the desired complete height at the rear (installation), based on the drawn-in passage height; please note that always the complete height with wall installation is drawn in, therefore a difference of 70 mm must be observed with ceiling installation.
4. Draw-in the column position (range 100 - 500 mm)
5. Define the sloping projection (ordering dimension) with a fixed reduction X depending on the inclination (X: 0°/32 mm, 5°/42mm, 10°/52 mm, 15°/61 mm, 20°/70 mm, 25°/78 mm, 30°/86 mm)
6. Define the column height (H) with a fixed reduction of 100 mm (ordering dimension)

Pergola awning ELEGANZA / ELEGANZA protect

Additional guiding tube andadditional anti-lift device respectively

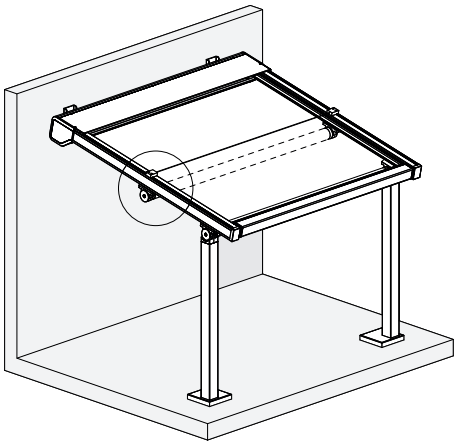

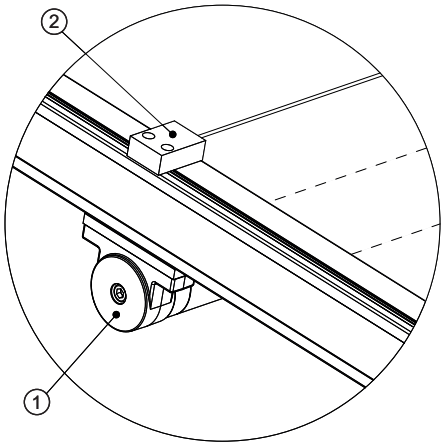

Legend

① Guiding tube (is fixed to the bottom side of the guide rail)
② Anti-lift device (is fixed to the upper side of the guide rail)

Recommendation for use and number of additional guiding tubes for the use as protection against rain with an inclination of 10° - 14°

Projection [mm] \ Width [mm]	3000	3500	3750	4000	4500	4750	5000	5500	5750	6000
2000	0	0	0	0	0	0	0	0	0	0
2500	0	0	0	0	0	0	0	0	0	0
3000	0	0	0	0	0	0	0	0	0	0
3500	0	0	0	0	0	0	0	0	0	0
4000	1	1	1	1	1	1	0	0	0	0
4500	1	1	1	0	0	0	0	0	0	
5000	0	0	0	0	0	0	0			
5500	0	0	0	0	0					

Recommendation for use and number of additional guiding tubes for the use as protection against rain with an inclination of < 10°

Projection [mm] \ Width [mm]	3000	3500	3750	4000	4500	4750	5000	5500	5750	6000
2000	0	0	0	0	0	0	0	0	0	0
2500	0	0	0	0	0	0	0	0	0	0
3000	0	0	0	0	0	0	0	0	0	0
3500	1	1	1	1	1	1	1	1	0	0
4000	2	2	2	2	2	2	1	1	1	1
4500	2	2	2	1	1	1	1	1	1	
5000	1	1	1	1	1	1	1			
5500	1	1	1	1	1					

Legend

Guiding tube included in the basic price

In regions and installation situations with high wind load or impact load (gusts of wind), we recommend the use of additional anti-lift devices and safety cables. This reduces the dynamic free moving space of the cover and protects the unit in case of such loads. The noise, caused by a flittering cover is reduced as well.

Recommendation for use of an additional anti-lift device, safety cable

The number of anti-lift devices is based on the number of the actually provided guiding tubes.

Projection [mm] \ Width [mm]	3000	3500	3750	4000	4500	4750	5000	5500	5750	6000
2000										
2500										
3000										
3500										
4000										
4500	X	X	X	X	X	X	X	X	X	
5000	X	X	X	X	X	X	X			
5500	X	X	X	X	X					

Legend

X	Recommendation additional anti-lift device		Guiding tube included in the basic price

Attention:

The use of an anti-lift device is only possible in combination with a guiding tube!

Pergola awning ELEGANZA / ELEGANZA protect

Column types

Standard

fixed, not lowerable column

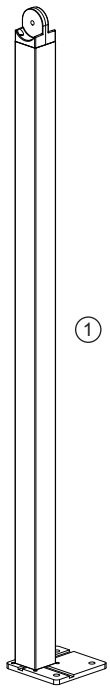

Optional

lowerable column

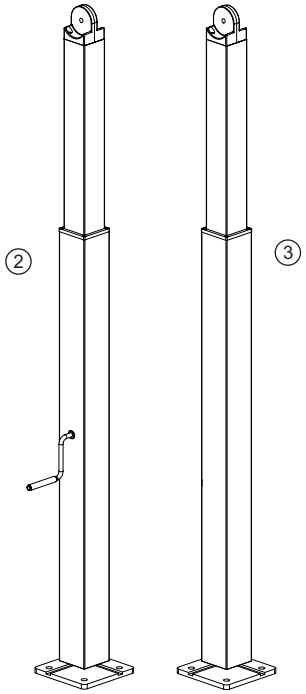

Notes:

- Only one column can be lowerable per element (with the help of a removable crank handle).
- The second column is not adjustable.

Legend

① Column fixed
② Column lowerable (with removable crank handle)
③ Column fixed (with lowerable column)

Column type: Standard

Column lengthening

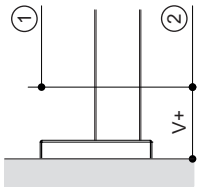

Column shortening

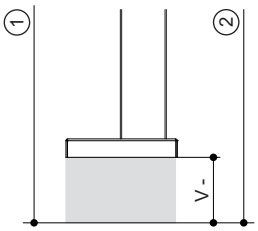

Legend

① Complete height
② Height at the front (column height)

V+ Column lengthening (max. 500 mm)
V- Column shortening (max. 500 mm)

Note:

Column lengthening / shortening not possible with lowerable column

Column type: lowerable column

Note:

- Column lengthening / shortening not possible with lowerable column!

The following notes for the use of lowerable columns in case of floor gradients must be observed:

- Due to technical reasons, the lower part of the column has a fixed length; as a consequence a visual offset at the columns may be noticed.
- A floor gradient up to 3 cm can be levelled out with the help of the lowerable column, so that the unit is perfectly aligned at the top.

Important when a lowerable column is used:

- When retracting and extending the unit, the cross profile must always be adjusted horizontally. Disregarding these instructions can cause damage to the units!

The following damages may occur:

- Pulling the zip-fastener out of the guide rail (with side seam guided units)
- Tearing of the lift tapes, when, due to the skew, the front rail get jammed
- high noise development when set in motion
- formation of wrinkles in the cover

Individual element with lowerable column

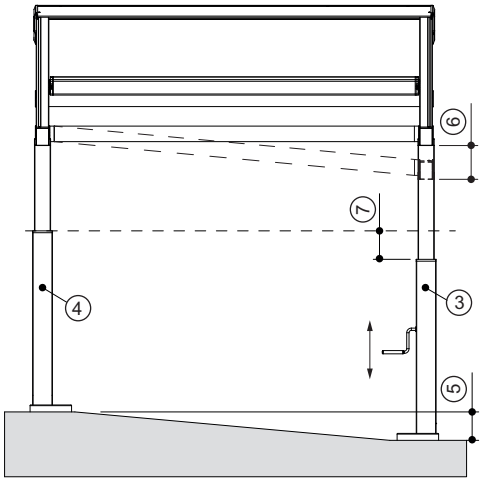

Legend

③ via hand crankle lowerable column

④ fixed column (stepped)

⑤ Offset (max. 30 mm) due to floor gradient

⑥ Lowering of the guide rail thanks to the lowerable column (max. 3° of the complete width)
these are 320 mm for a complete width of 6000 mm
maximum increase in height 30 mm

⑦ visual offset at the column due to the floor gradient

Pergola awning ELEGANZA / ELEGANZA protect

Column types

System combination with lowerable column

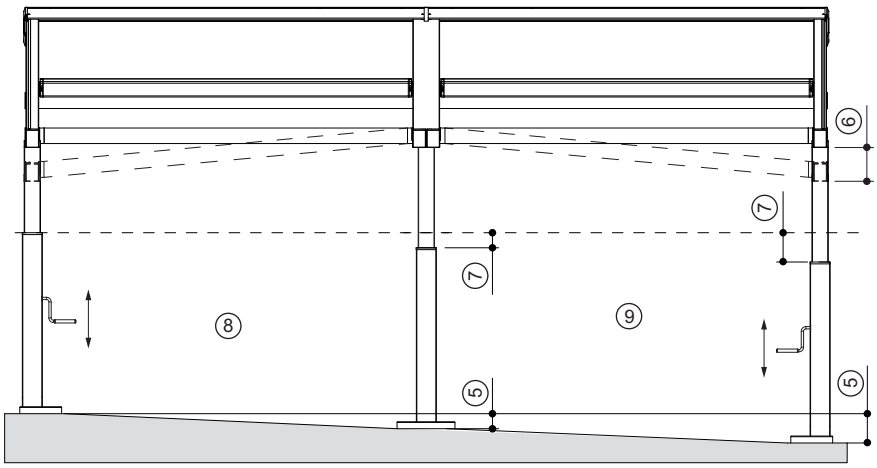

A lowerable column can not be used, if the differences in the floor gradient exceed 30 mm. In case of a wrong order, a horizontal adjustment of the front rail is not possible.
This design can only be executed with fixed columns.

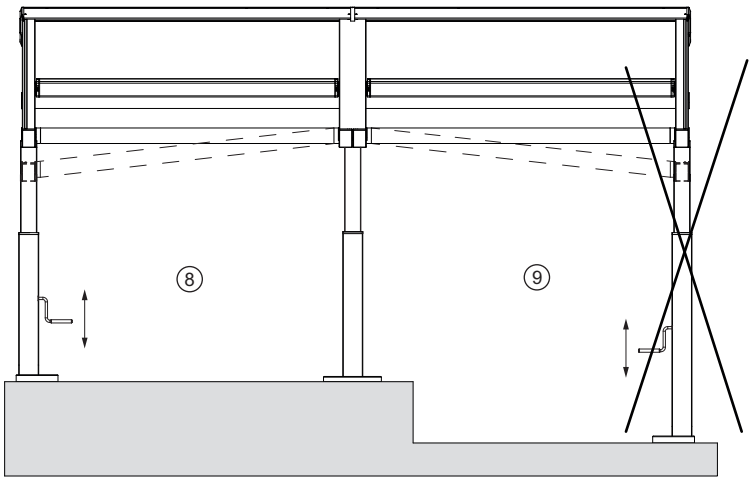

Legend

③ via hand crankle lowerable column
④ fixed column (stepped)
⑤ Offset (max. 30 mm) due to floor gradient
⑥ Lowering of the guide rail thanks to the lowerable column (max. 3° of the complete width)
these are 320 mm for a complete width of 6000 mm
maximum increase in height 30 mm
⑦ visual offset at the column due to the floor gradient
⑧ Start element
⑨ End element

Adjusting range

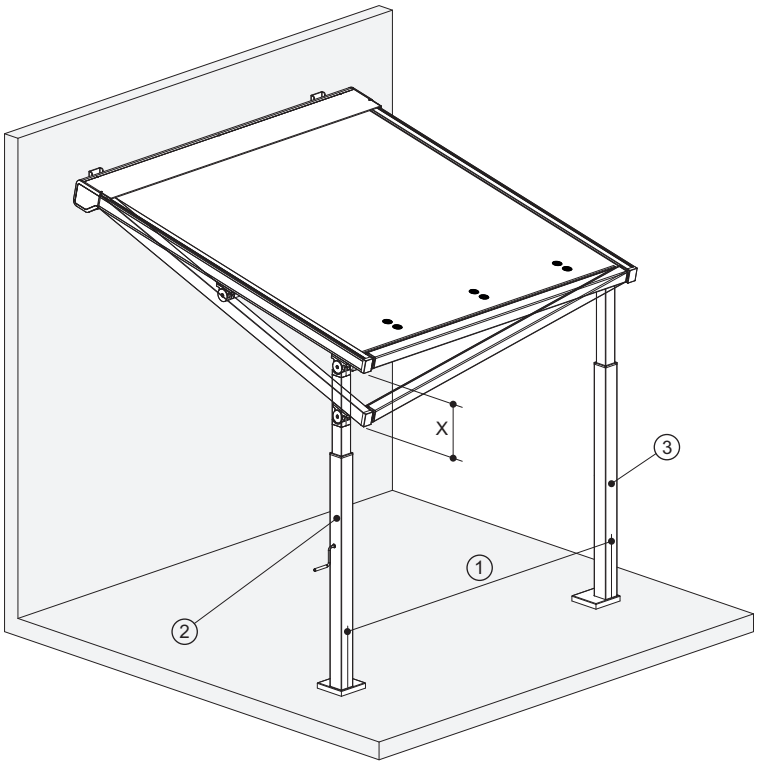

Legend

① Complete width
② lowerable column (variable)
③ lowerable column (fixed)

Table for the maximal range of adjustment:

Complete width [mm]	x (max.) [mm]
2000	110
2500	130
3000	160
3500	190
4000	210
4500	240
5000	260
5500	290
6000	320

Due to the lowered column, an additional inclination of max. 3° is possible on the side of the variable column.

The unit may not be retracted or extended, if the column is lowered. When set in motion, the lowerable column must be adjusted in such a way, that the cross brace is aligned horizontally between the columns.

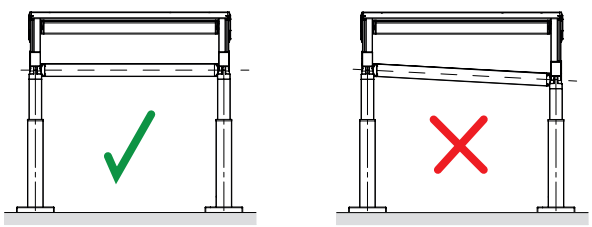

Pergola awning ELEGANZA / ELEGANZA protect

Installation scheme

Installation scheme columns (with single unit)

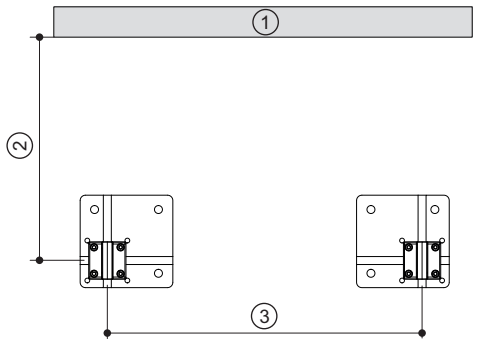

Installation scheme columns (with combination)

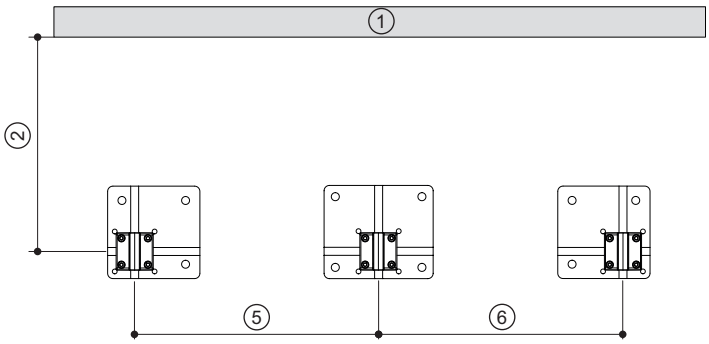

Number of brackets per module

Attention: schematic illustration (applies to wall, ceiling and rafter brackets)

Complete width <= 4000mm

2 brackets/unit

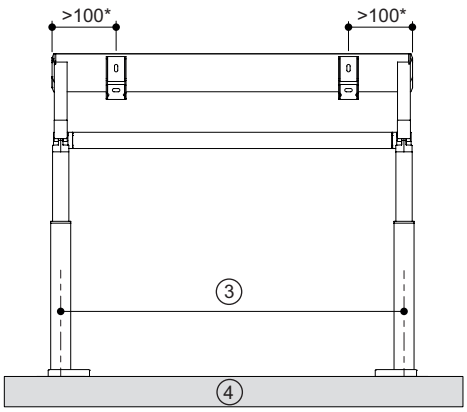

Complete width > 4000mm

3 brackets/unit

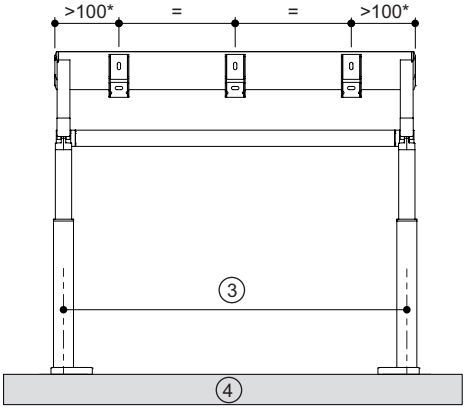

Legend

① Wall
② Column distance (fixing base wall - axial dimension of the column)
③ Complete width (with single unit)
④ Floor
⑤ Complete width 1 (with combination)
⑥ Complete width 2 (with combination)

* For wall bracket type D, the minimum dimension is 225 mm

Water drain eyelets in the awning cover

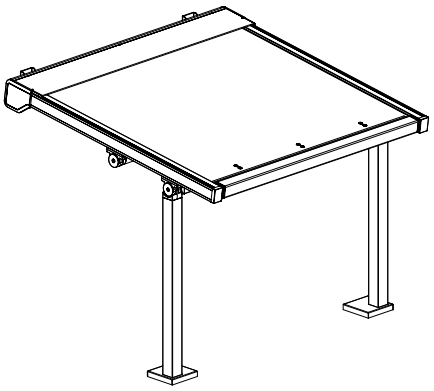

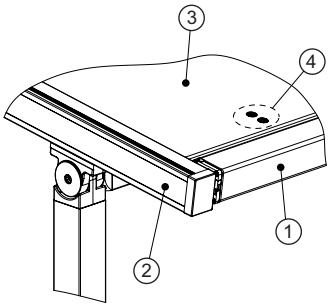

The awning covers ELEGANZA / ELEGANZE protect are always provided with eyelets for the water drain, when delivered.

Minimum excess length of the guide rail over the cross brace (with Varioplus)

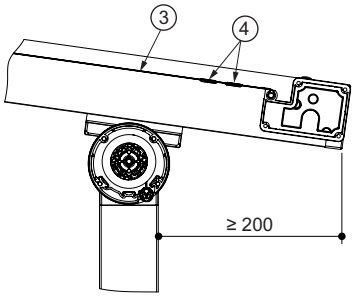

With units with Varioplus roller blind, the guide rail must protrude the column by at least 200 mm, so that the water does not drain directly onto the cassette of the Varioplus roller blind.

Legend

① Front rail
② Guide rail
③ Awning cover
④ Water drainage eyelets

Pergola awning ELEGANZA / ELEGANZA protect

LED lighting

LED in the box

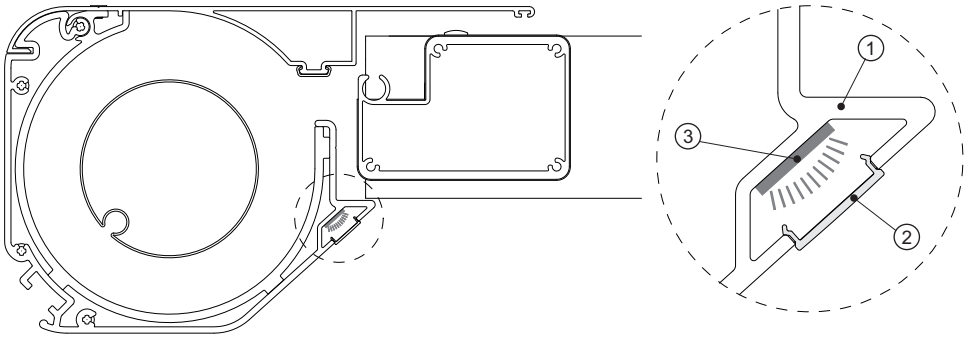

LED in the guide rails

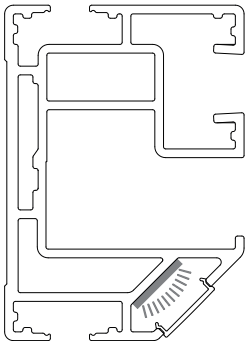

Technical data LED stripes:

- Light color 2700 K (warm-white)
- Voltage 6.2 W/m - 24V
- 650 Lumen/m, 240 LED/m
- Ambient temperature -20°C to + 45°C
- Color rendering index Ra > 90
- User-defined dimmable light intensity

Operation only possible with **ONYX** or **Somfy radio io** !

Combination possibilities

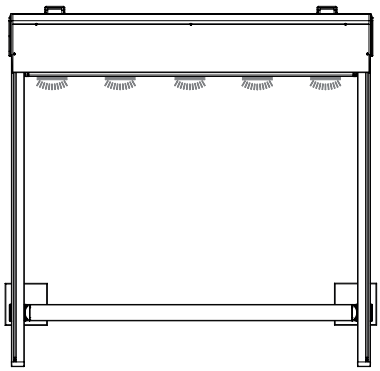

LED in the box only

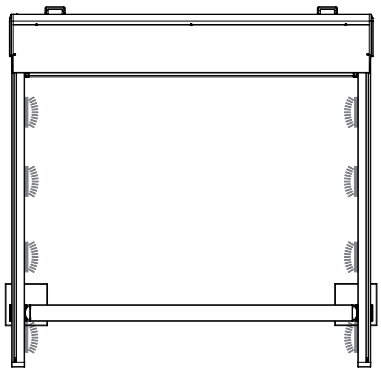

LED in the guide rails only

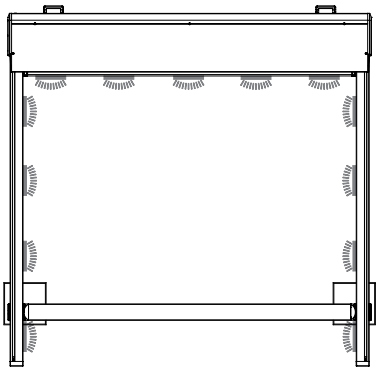

LED in the box and in the guide rails

Legend

① Box profile
② satinised profile
③ LED stripes

Housing control unit for LED

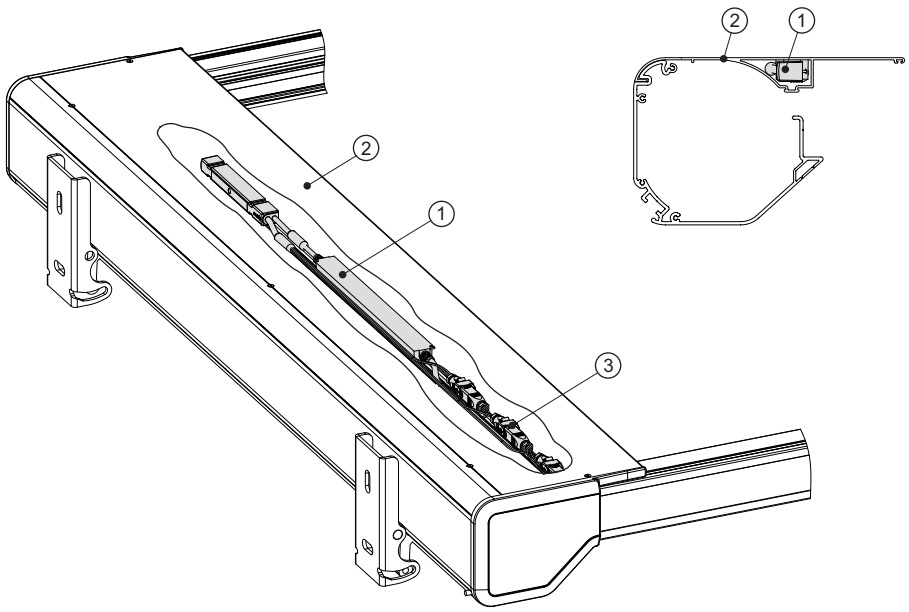

The control unit for the LED lighting is stowed in the channel of the roof profile ② and thus not visible from the outside. The individual LED stripes of the guide rails and the box are connected to the LED control unit with Hirschmann plug connection STAS 2 / STAK 2. The Hirschmann plug connection are stowed in the channel of the roof profile, too.

Legend

① LED control unit (Somfy or ONYX)
② Roof profile
③ Hirschmann plug connection

Pergola awning ELEGANZA / ELEGANZA protect

Cable exits

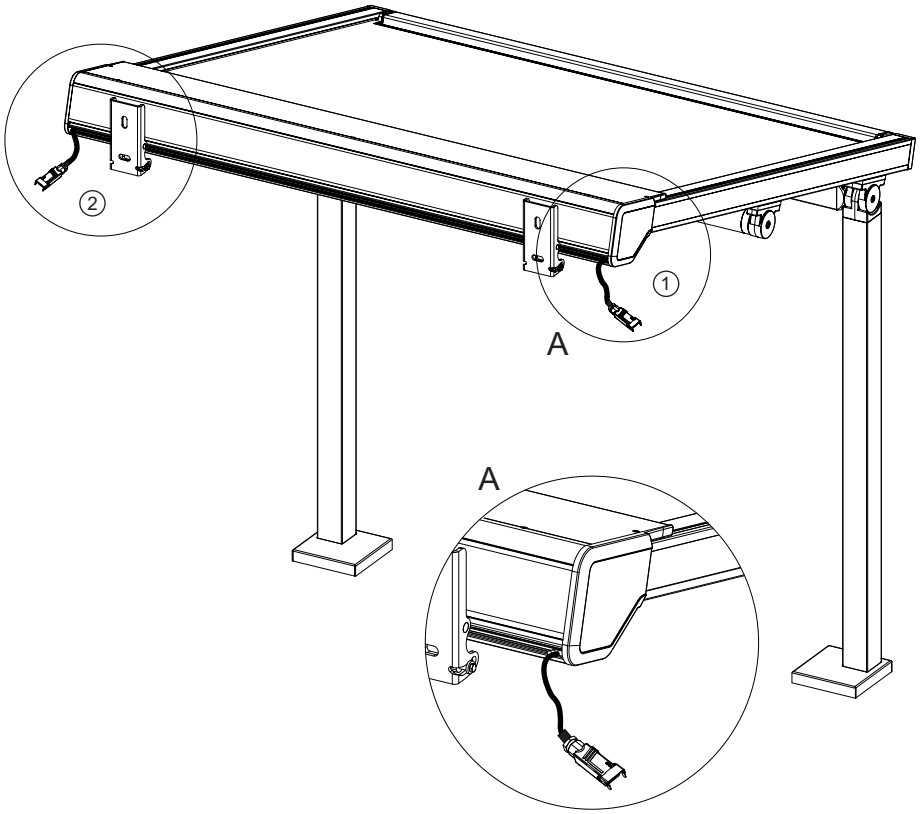

Depending on the design (with Varioplus, with LED), up to 3 cable ends can stick out of the box at the selected cable exit side.

available cable length for the unit drive:

- 0.5 m cable with Hirschmann connector STAS 3 (Standard)
- 3 m cable with open end (surcharge)
- 5 m cable with open end (surcharge)
- 10 m cable with open end (surcharge)

Legend

① Cable exit on the left side
② Cable exit on the right side

Varioplus roller blind (VP)

Type: Varioplus roller blind (VP) - self-supporting

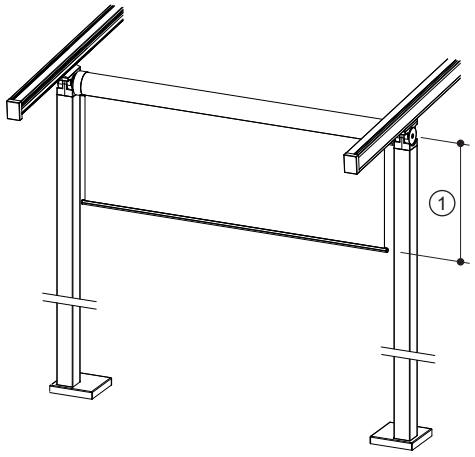

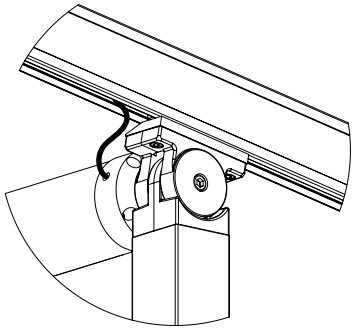

Legend

① Sloping projection Varioplus

Instead of the cross brace, a **self-supporting Variolus roller blind** can optionally be installed between the two front columns. It serves as vertical shading element (sight screen/glare protection) and can be ordered for any complete width and for a sloping projection of the cover not exceeding 2000 mm.

The Varioplus roller blind is only available in combination with **fixed columns**. This option is not available for units with lowerable column.

The Varioplus roller blind is always provided with a motor. The power supply for the drive is provided via the guide rails and thus discreetly hidden.

Type: Varioplus roller blind (VP) - rail guided

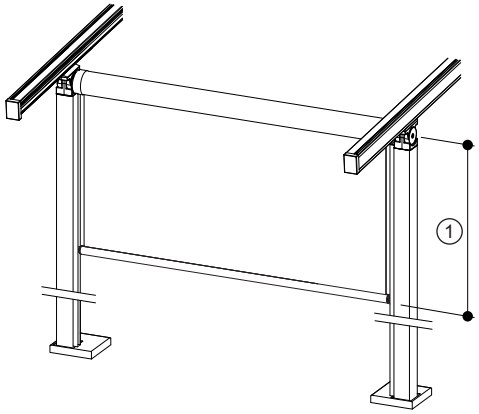

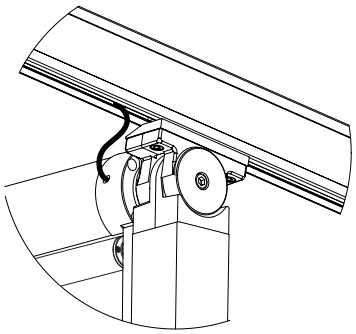

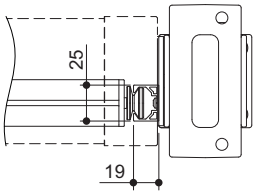

Legend

① Sloping projection Varioplus

Instead of the cross brace, a **rail guided Variolus roller blind** can optionally be installed between the two front columns. It serves as vertical shading element (sight screen/glare protection) and can be ordered for any complete width and for a sloping projection of the cover not exceeding 2000 mm.

The Varioplus roller blind is only available in combination with **fixed columns** . This option is not available for units with lowerable column.

The Varioplus roller blind is always provided with a motor. The power supply for the drive is provided via the guide rails and thus discreetly hidden.

The following possibilities are available for the operation of the Varioplus roller blind:

- Operation via switch
- ONYX
- Somfy io

PERGOLAS

Type overview

SINTESI



SINTESI FREE



TERRA SIDE



	SINTESI	SINTESI FREE	TERRA SIDE***
Max. dimensions			
Max. complete width [mm]	6000*	6000*	6000
Max. sloping projection [mm]	6500*	6500*	-
Max. height [mm]	3500****	-	3000
Max. surface [m²]	-	-	-
Combinable	+	+	-
Design	Pergola	Pergola	Side-seam guided vertical awning
Structure	The construction is completely made of stable, extruded aluminium profiles and components made of stainless steel, which guarantee an easy installation and high functionality of the system		
Roof	Retractable weatherproof textile folding roof		-
Roof pitch	7° - 18°	7° - 18°	-
Defined drip cap	In the column	+	-
Drive:			
Motor	o	o	o
Operation	Hand-held radio/wall-mounted radio transmitter, smart phone, tablet, voice control		
Sensors			
snow	+	+	+
frost	o	o	+
Wind	o	o	+
Rain	+	+	+
Sun	o	o	+
Frame colours (RAL):			
Standard colours	o	o	o
"MULTICOLOR"	+	+	+
"HWP"	+	+	+
"1000 COLORS"	+	+	+
Fixing			
Free-standing	+	-	-
Wall mounting	o	-	-
Ceiling installation	+	-	-
Gable unit	+	-	-
Can be integrated into the building structure	-	o	-
Features			
LED in the structure	+	+	-
Infrared radiant heater	+	+	-
Wall connection top board	o	o	-
Rain shelter	o	o	-
Side closures zip-screen	+	-	-
Varioplus roller blind	-	-	-

Legend

o Included in the delivery
+ Surcharge / price reduction
- Not available

* From a complete width of 5501 mm, the sloping projection is limited to a maximum of 5110 mm.
** For integration in VENTUR slatted roof
*** For integration in SINTESI pergola
**** Refers to the max. height at the front.

SINTESI



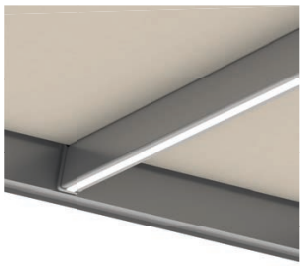

LED lighting in the cover profiles lights up the space underneath the pergola with a comfortable light.



When retracted, the rain shelter is a perfect protection for the cover against weather, guided water drain.



Due to the special guidance of the cover profiles, the entire cover package requires 20% less space than conventional systems

Limit sizes

	SINTESI
Minimum complete width [mm]	1300
Maximum complete width [mm]	6000*
Minimum sloping projection [mm]	1000
Maximum sloping projection [mm]	6500*
Minimum complete height	500 for wall mounting / 800 for free-standing version
Minimum front height	350
Maximum complete height	5000 for wall mounting / 3500 for free standing version
Maximum front height	3500

* The specified drop applies up to a finished width of 5500 mm. From a complete width of 5501 mm, the sloping projection is limited to a maximum of 5110 mm.

Types of installation

SINTESI Wall installation

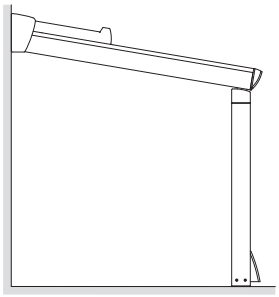

SINTESI ceiling installation

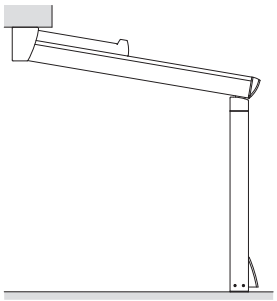

SINTESI self-supporting

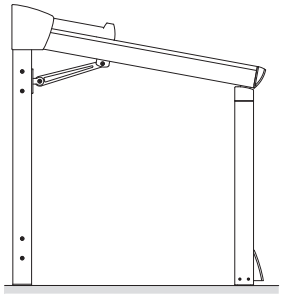

Scope of supply

- Folding pergola SINTESI in freely selectable frame colour in matt and matt fine texture from the HELLA colour range
- Cover profiles identical to the frame colour
- Concealed water drainage via the columns
- Rain shelter in aluminium or optionally in PVC
- Weather sensor with wind, sun and temperature sensor for the basic module
- Frost detection, which automatically retracts the blind completely when the temperature falls below the set value
- Operation by means of radio hand-held transmitter
- Standard covering: OPATEX PRO
- Mounting brackets for wall

Supplementary equipment

- Smart home control with the ONYX centre box for operation via smartphone, tablet, hand-held transmitter and wall-mounted transmitter or automations and patented live feedback on the position and movement of the shading element
- Cover profiles optionally in alternate colour on request
- Large selection of designs (waterproof and blackout PVC fabric)
- Integrated LED lighting in the cover profiles is optionally feasible
- Precipitation sensor for rain and snow detection
- Modular installation of several units next to each other
- Wall-mounted, ceiling-mounted, gable system or free-standing
- Integration of TERRA SIDE side-seam guided vertical awnings can be retrofitted at any time
- Infrared radiant heater
- Simple operation using the ONYX control system specially developed for sun protection products
- Patented moving of the cover profiles in between the guide rails

Benefits of the product

- Heat protection
- Glare protection
- Privacy
- Weather protection
- Rain protection
- Protection against the cold
- Protection from UV radiation
- High wind stability
- Smart Home capable
- LED lighting for a pleasant ambience - optionally possible
- Patented live feedback on the position and movement of the shading element via the ONYX app
- Each pergola is made to measure and therefore a perfectly fitting solution for the terrace

SINTESI

Wall installation Standard

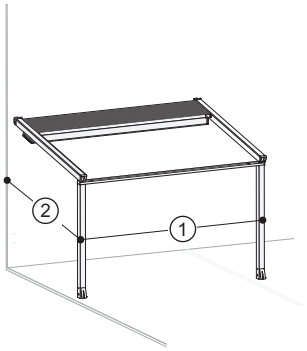

Lateral protrusion of the end caps

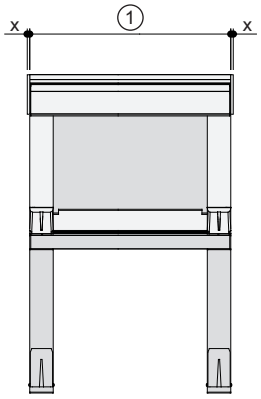

Legend

①	Complete width (mm)
②	Sloping projection (mm)
x	with rain shelter made of aluminium = 2 mm with rain shelter made of PVC = 20 mm

Wall installation additional module

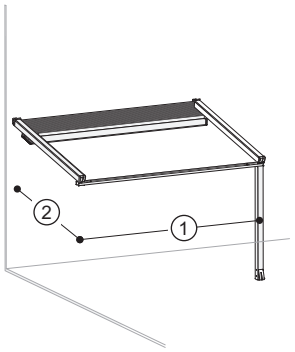

Combination

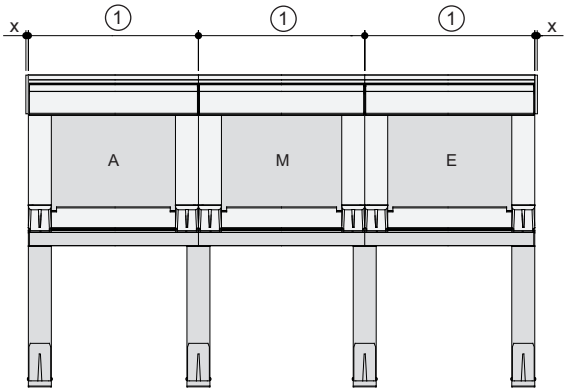

Legend

①	Complete width (mm)
②	Sloping projection (mm)
x	with aluminium rain shelter = 2 mm with PVC rain shelter = 20 mm

A	Start element
M	Middle element
E	End element

Brackets

Wall bracket Type A
Art. no. 16010510
(3 installation sets)

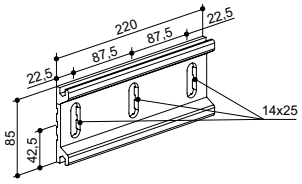

Wall bracket type C
Art. no. 16010532
(4 installation sets)

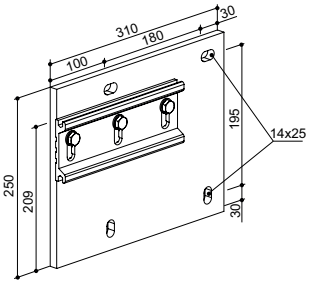

Wall bracket type D
Art. no. 16010533
(6 installation sets)

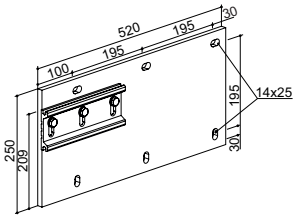

Wall bracket type I
Art. no. 16010536
(in conjunction with heavy-duty bracket)

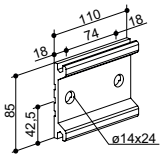

Wall bracket type B (double unit)
Art. no. 16010511
(3 installation sets)

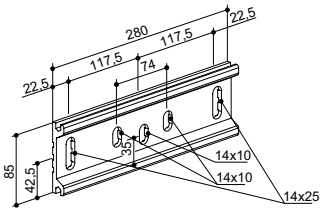

2x Wall bracket type C (double unit)
Art. no. 16010532
(8 installation sets)

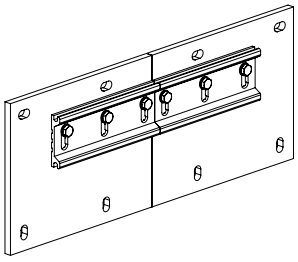

2x Wall bracket type D (double unit)
Art. no. 16010533
(12 installation sets)

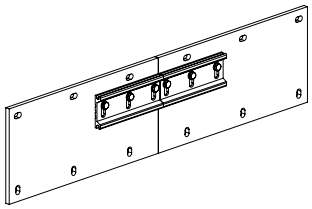

Ceiling bracket Type E

Art. no. 16010534
(3 installation sets)

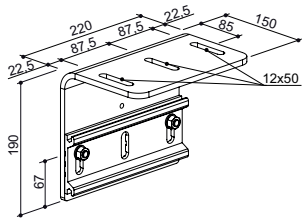

Ceiling bracket type F (double unit)
Art. no. 16010535
(3 installation sets)

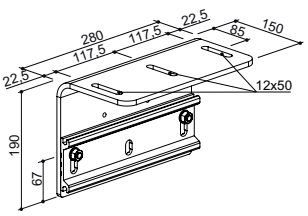

Heavy-duty bracket 160x110 mm

Art. no. 10200559
for ETICS 125-160 mm
Art. no. 10200560
for ETICS 160-240 mm

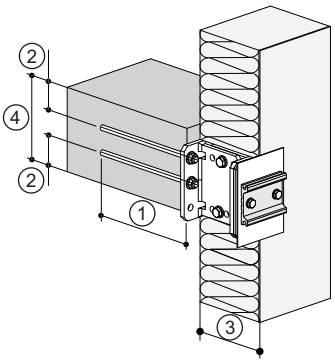

Legend

① Anchorage depth
② Distance from the edge min. 55mm
③ ETICS
④ Thickness of the ceiling

SINTESI

Brackets

Floor bracket Standard
Art. no. 16010516
(4 Installation sets 1 A4)

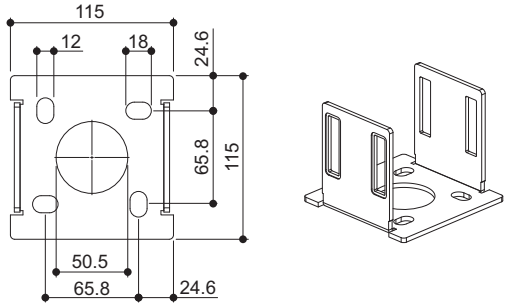

Base plate version free-standing
Art. no. 16010545
(3 Installation sets 1 A4)

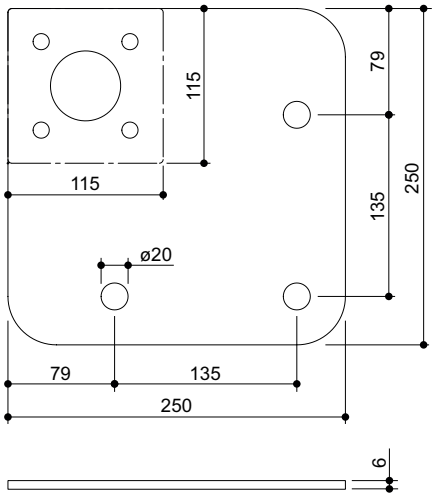

Base plate Centre column
Art. no. 16010518
(2 Installation sets 1 A4)

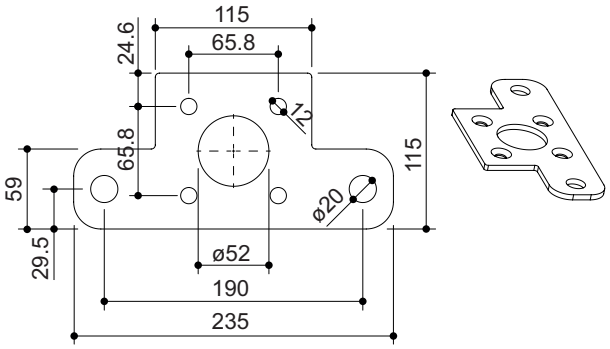

Base plate corner column
Art. no. 16010506
(2 Installation sets 1 A4)

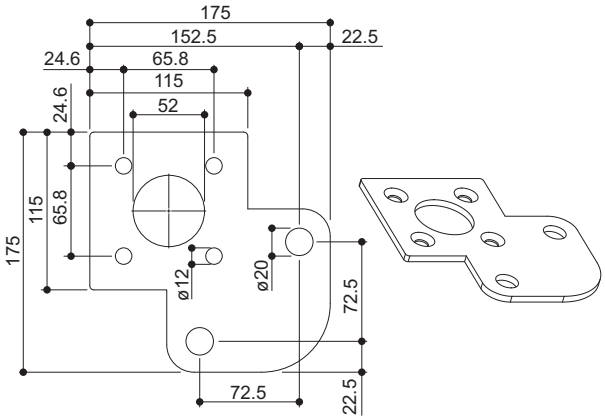

Taking of measurements

Wall installation
(with rain shelter made of aluminium)

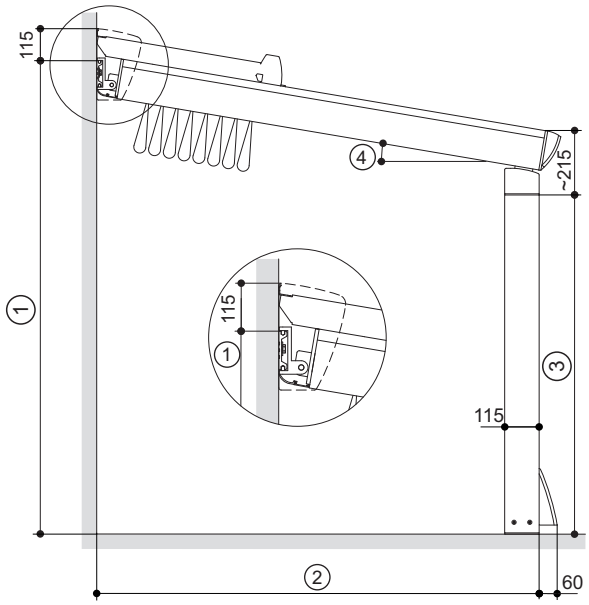

Wall installation with guide rail lengthening
(with rain shelter made of aluminium)

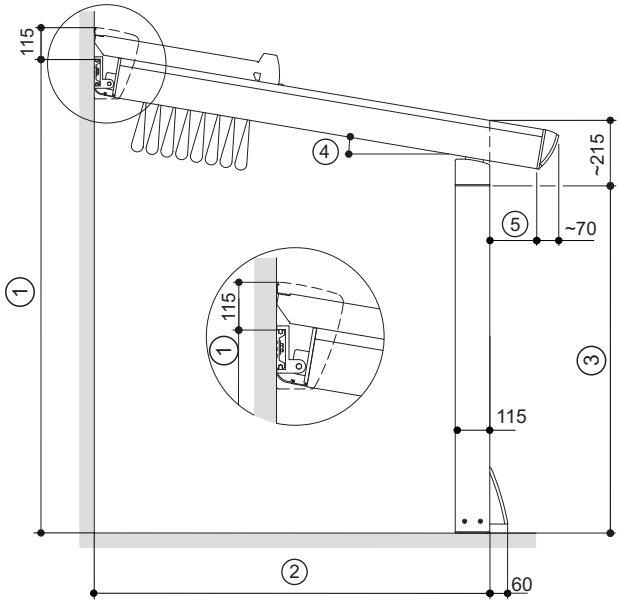

Legend

① Height up to the upper edge of the mounting bracket
② Projection up to the outer edge of the column
③ Height up to the lower edge of the rain gutter
④ Inclination
⑤ Dimensioning specification guide rail lengthening (max. 300 mm)

Notes:

- The wiring is discreetly hidden in the SINTESI.
- The rain gutter provided at the variant with the guide rail lengthening has no drainage function, but serves as linking element.

Attention:

- max. 300 mm guide rail lengthening possible!
- If the unit is installed to the wall, the sloping projection ② is always measured from the fixing base wall up to the outer edge of the column: the same applies, if a wall bracket type C or type D is used.

SINTESI

Taking of measurements

Wall installation with transverse profile (with rain shelter made of aluminium)

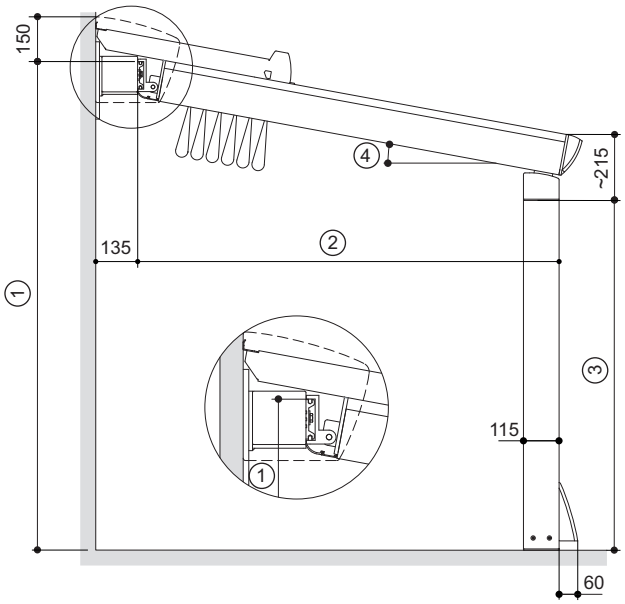

Notes:

- The wiring is discreetly hidden in the SINTESI.
- The rain gutter provided at the variant with the guide rail lengthening has no drainage function, but serves as linking element.
- max. 300 mm guide rail lengthening possible! (for dimensions, see wall mounting)

Attention:

The number of wall brackets and the type of bracket plates are automatically assigned by the system.

If additional wall brackets (deviating from the specified number of the system) are required, these must be ordered separately as individual parts (not as assemblies).

Individual parts for wall bracket for wall mounting with cross profile

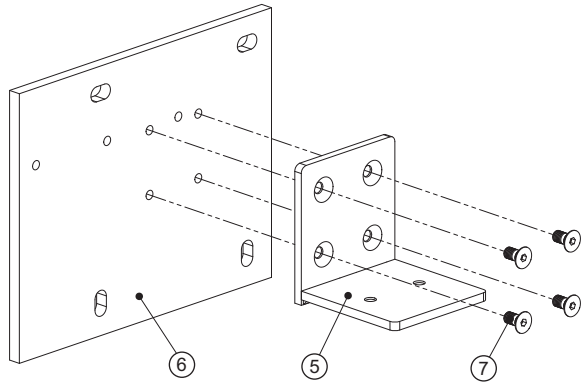

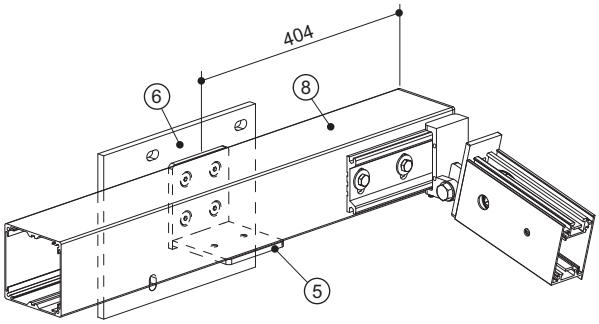

Legend

① Height up to the upper edge of the mounting bracket
② Projection up to the outer edge of the column
③ Height up to the lower edge of the rain gutter
④ Inclination
⑤ Wall mounting bracket self-supporting - Art. No. 16010529
⑥ Bracket plate - acc. to order
Type C (in illustration) - Art. No. 16010531
Type D - Art. No. 16010526
⑦ Countersunk screw M10x20 - Art. No. 80010313
⑧ Cross profile with mounting brackets for guide rail installation

Sealing plates for rain protection roof PVC

With wall installation

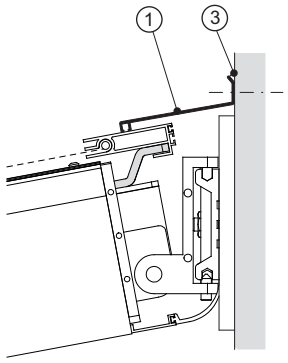

Legend

① Wall connection profile art. no. 16010423
② Sealing cover art. no. 16010530
③ Silicone joint

For wall installation version with transverse profile

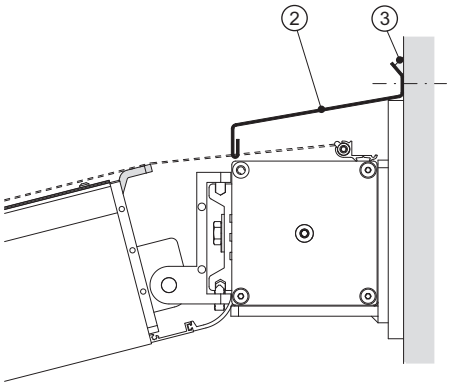

SINTESI

Taking of measurements

Ceiling installation (without rain shelter)

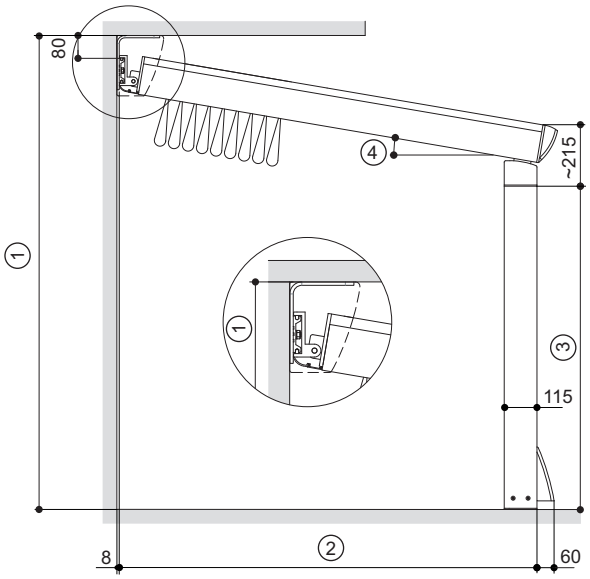

Ceiling installation (with rain shelter made of aluminium)

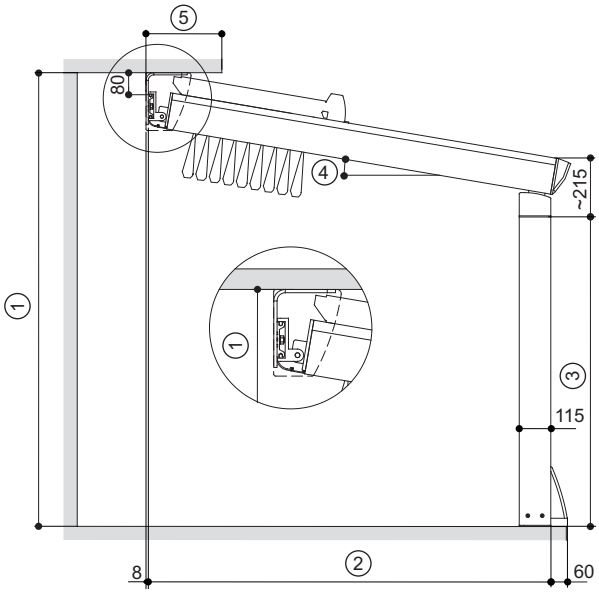

Wall installation beneath the balcony slab (without rain shelter)

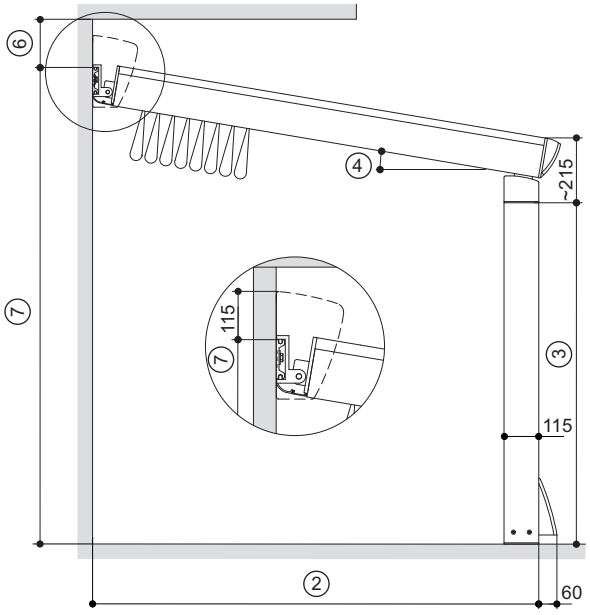

Legend

① Height up to the upper edge of the ceiling bracket
② Projection up to the outer edge of the column
③ Height up to the lower edge of the rain gutter
④ Inclination
⑤ Distance of max. 300 mm to the rain shelter
⑥ Distance of min. 150 mm to the mounting bracket
⑦ Height up to the upper edge of the mounting bracket

Self-supporting

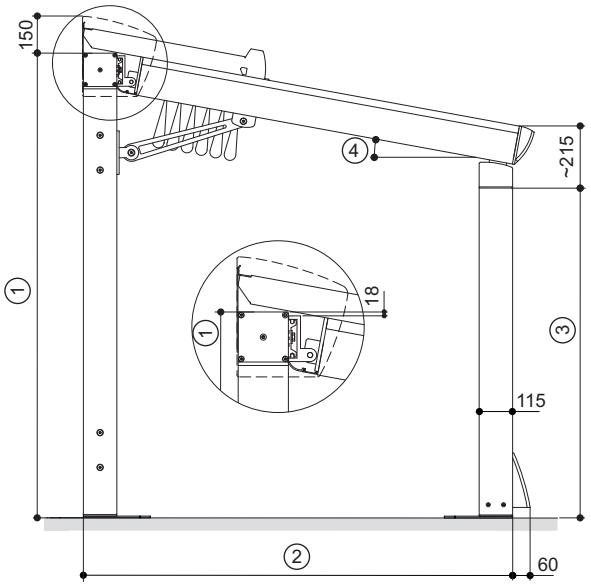

Additional strut between transverse profile and column with self-supporting units

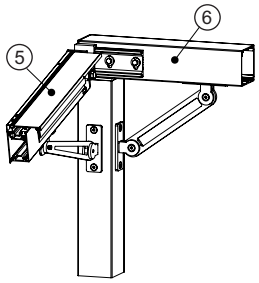

Legend

① Height up to the upper edge of the transverse profile
② Projection up to the outer edge of the column
③ Height up to the lower edge of the rain gutter
④ Inclination
⑤ Guide rail
⑥ Transverse profile

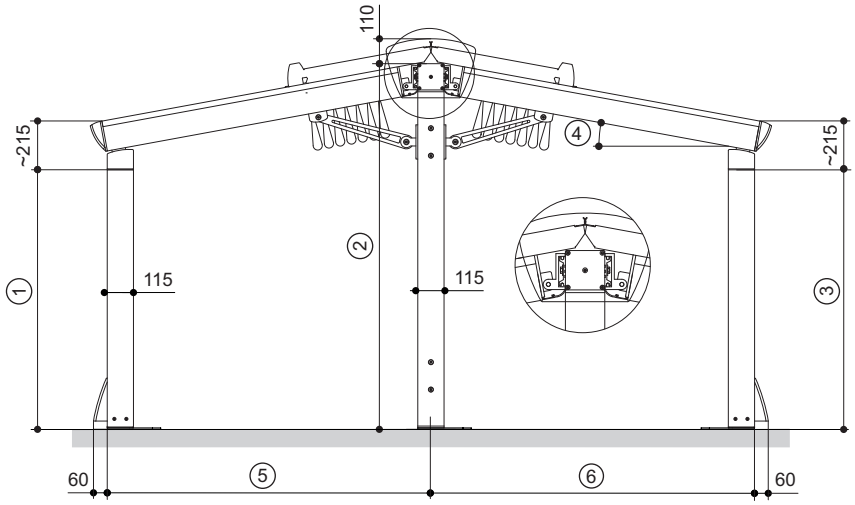

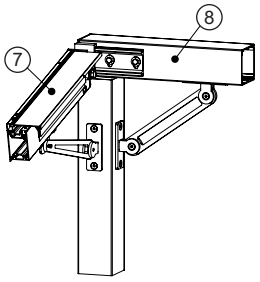

Legend

① Height at the front up to the lower edge of the rain gutter
② Height at the rear up to the upper edge of the transverse profile
③ Height at the front up to the lower edge of the rain gutter
④ Inclination
⑤ Dimension from the outer edge of the column at the outside up to the middle of the column in the middle
⑥ Dimension from the middle of the column in the middle up to the outer edge of the column on the outside
⑦ Guide rail
⑧ Transverse profile

SINTESI

Drainage system in the columns

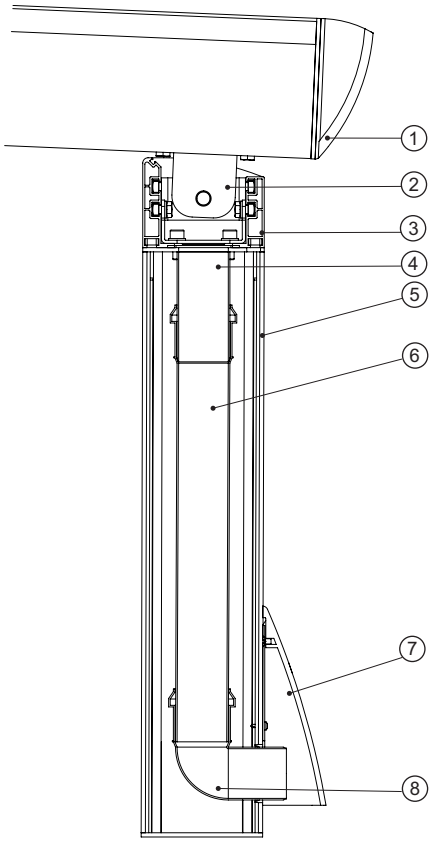

Definition of water drain wall-/ceiling mounting

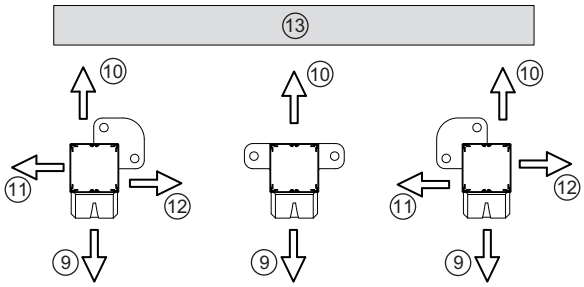

Legend

①	End cap for guide rail		
②	Adjacent bracket for guide rail		
③	Rain gutter		
④	Water drainage outlet		
⑤	Column		
⑥	Water drainage pipe inside		
⑦	Covering cap for column		
⑧	Water drainage bent pipe		
⑨	Outside (Standard)	⑩	On the inside
⑪	On the left side	⑫	On the right side
⑬	Wall		
⑭	Wall side water connection possible		
⑮	Height of the rain gutter (Standard: 35 mm, optionally a higher rain gutter can be selected)		

Lateral water drain
(Standard height)

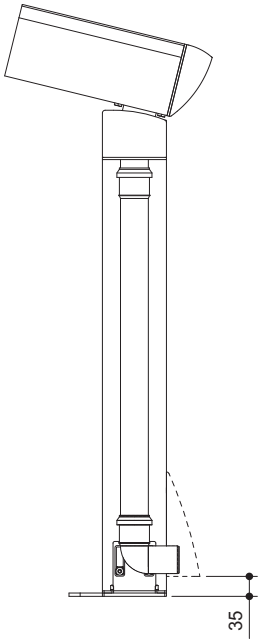

Lateral water drain
Variable height

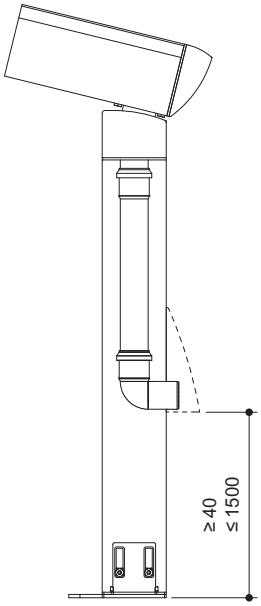

Water drain downwards

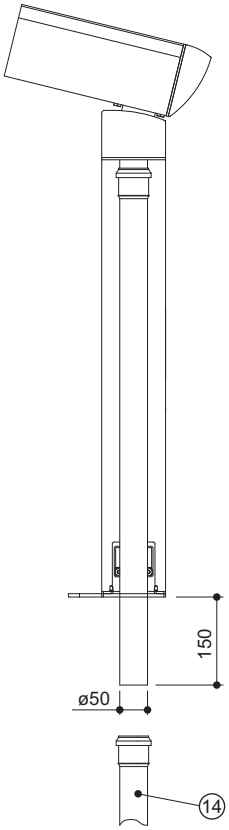

Height of the rain gutter

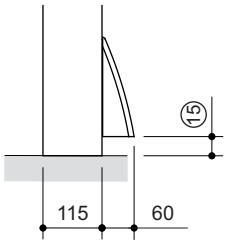

At least 1 water drain per unit is required!

Additional columns

Additional column at the front

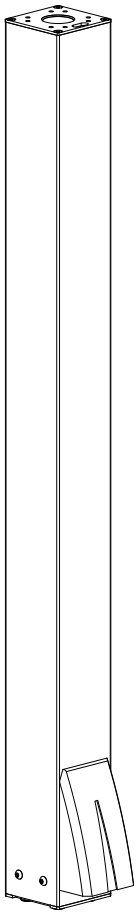

Front column powder-coated with a maximum height of 2500 mm, integrated water drain included.

Specification of the position required, if mounted on the right side, in the middle of on the left side.

Additional column laterally

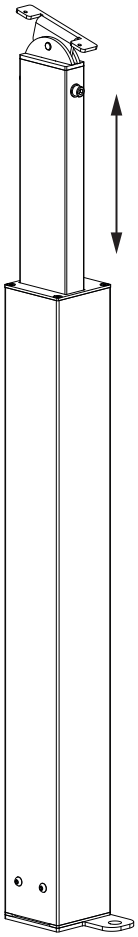

Telescopic lateral column powder-coated, with a maximum height of 3000 mm. Standard intermediate column without water drainage.

Reinforcement of the inner surface of the column (for direct connection to the wall)

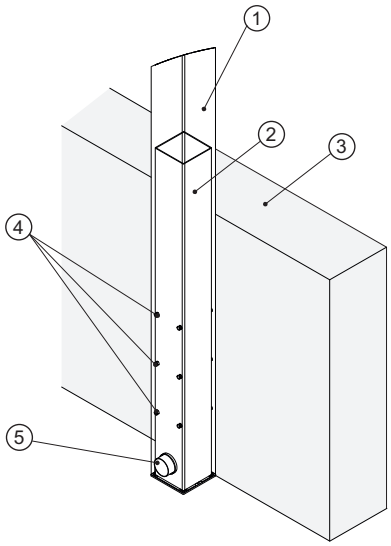

Legend

① Column
② Reinforcement profile inside 100x100x2 mm
③ Wall
④ Mounting holes according to order
⑤ Water drainage

SINTESI

Additional profiles for lateral closures

Front rail made of aluminium 35x55 mm

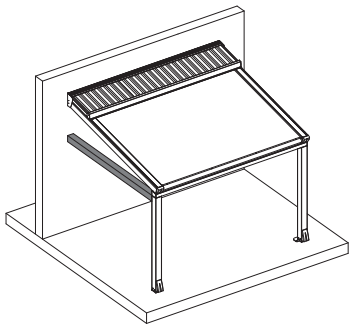

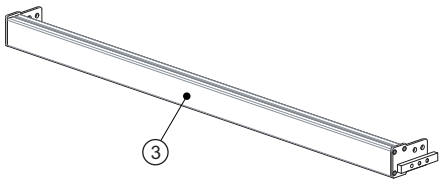

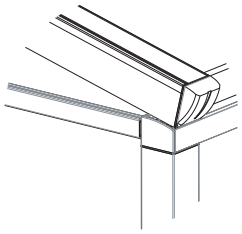

Laterally required for trapezoid kit, when no TERRA SIDE is laterally mounted.

Gutter profile 115x85 mm

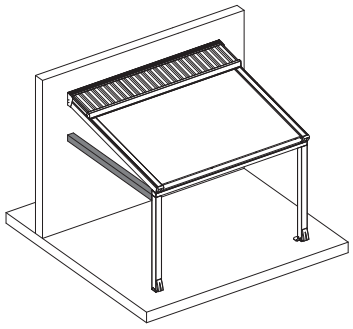

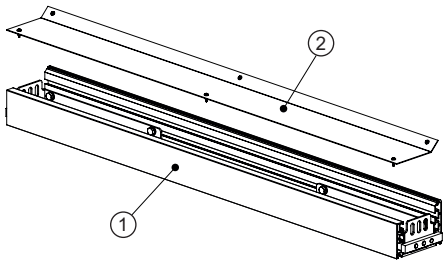

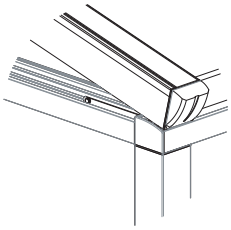

If the complete width exceeds 4500 mm, a rain gutter profile is mandatory for TERRA SIDE.
If the length exceeds 6000 mm, an intermediate column is required.

Column profile 115x115 mm

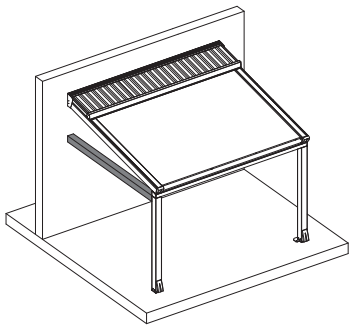

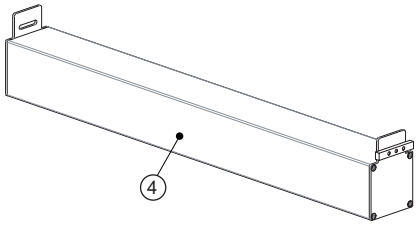

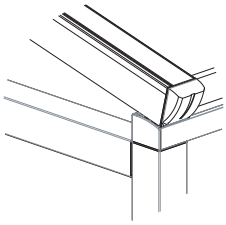

If the length exceeds 6000 mm, an intermediate column is required.

Legend

①	Rain gutter profile	③	Front rail 35x55 mm
②	Covering profile	④	Column profile

Top board covering between box and ceiling

Aluminium powder-coated

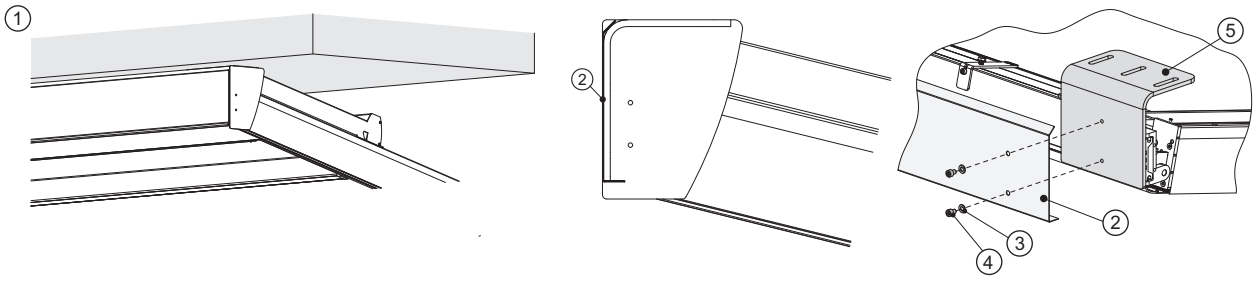

Legend

① Detail back view
② Cover for ceiling attachment - Art. no. 16010524
③ Washer - (Art. no. 82010009)
④ Cylinder head screw M8x10 - art. no. 80010088
⑤ Ceiling bracket

Vertical section with rain shelter

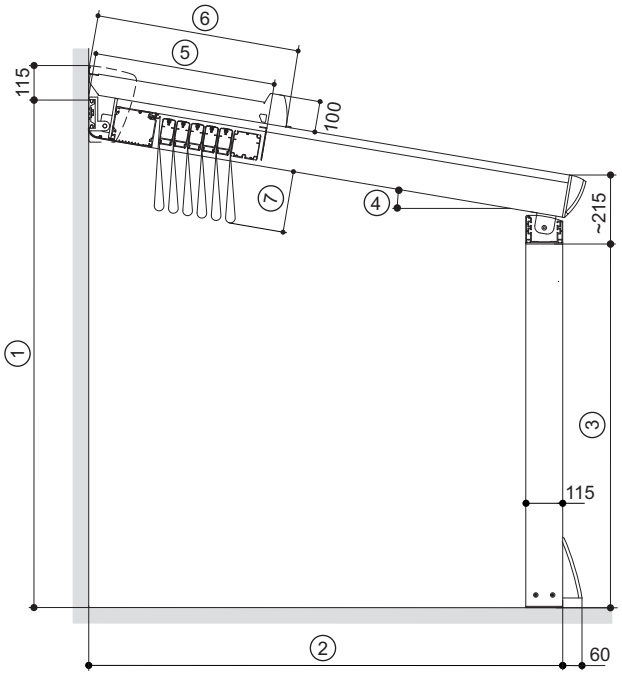

Legend

① Height up to the upper edge of the mounting bracket
② Projection up to the outer edge of the column
③ Height up to the lower edge of the rain gutter
⑤ Inclination
⑤ Required space for packaging
⑥ Projection rain shelter
⑦ Max. 255 mm

Number of cover profiles	Front rail	Space required for packaging [mm]	Projection rain shelter [mm]			
			Wall installation	Ceiling installation	Self-supporting	Gable unit
2	1	430	640	640	775	775
3	1	470	640	640	775	775
4	1	510	640	640	775	775
5	1	560	640	640	775	775
6	1	600	775	640	895	775
7	1	650	775	775	895	895
8	1	690	895	775	1010	895
9	1	740	895	775	1010	1010

SINTESI

Rain shelter standard with wall installation

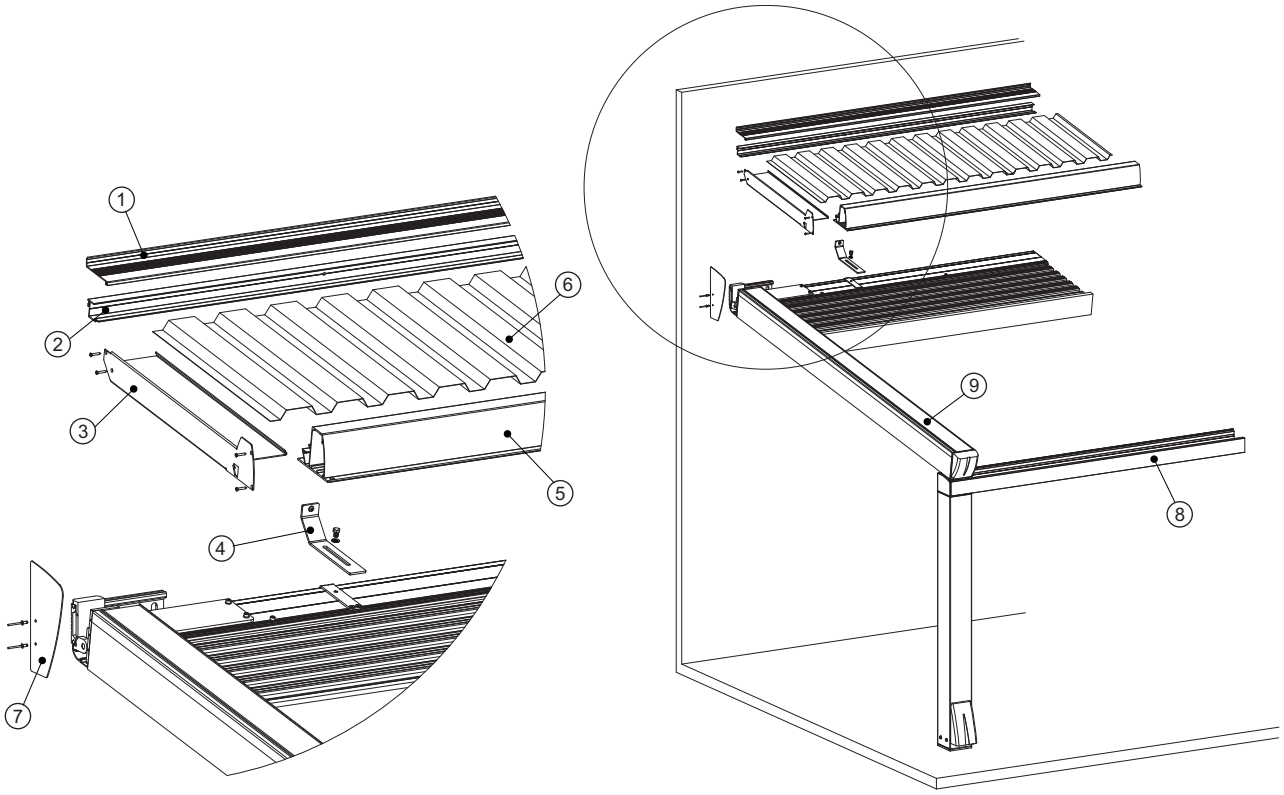

Legend

① Wall connection profile
② Integrating profile for trapezoid steel plate
③ Side plate
④ Mounting bracket (connection rain shelter with motor box)
⑤ Rain shelter profile
⑥ Trapezoid steel plate
⑦ lateral cover sheet
⑧ Rain gutter at the front
⑨ lateral guiding

Attention: Optionally a rain shelter made of PVC is available without surcharge.

Transverse profile for rain shelter with water drainage drilling

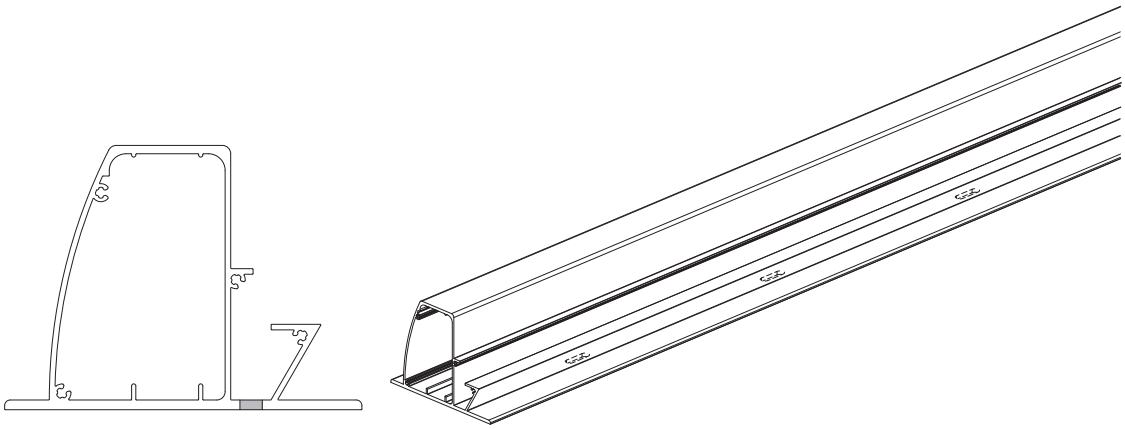

As a standard the transverse profile of the rain shelter is provided with additional boreholes for the water drainage.

Rain protection profile as standard for all models (except SINTESI FREE)

Fixed at the front rail of the SINTESI.

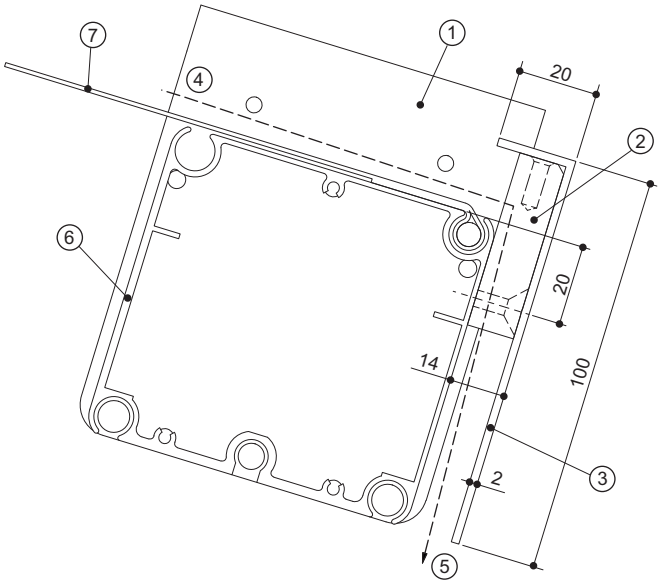

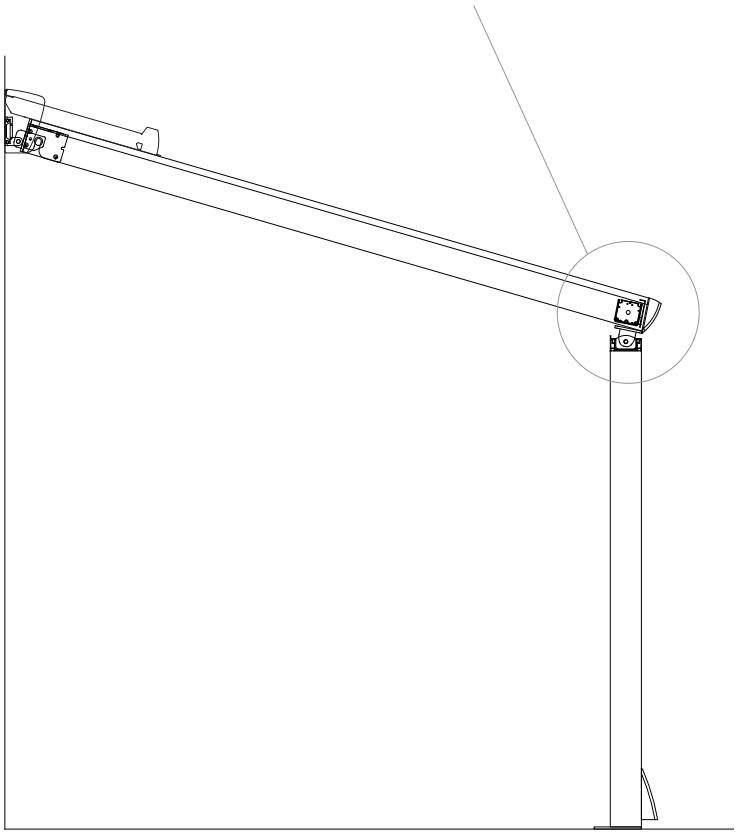

Legend

① Glider at the front rail
② Spacer Bracket profile
③ Bracket profile Rain protection profile 100x20x2 mm
④ Water flow
⑤ Water outlet into the rain gutter
⑥ Front rail
⑦ Cover

SINTESI

Assembly kit for trapezoid closures

The product will be supplied as loose assembly kit. It has been developed, for ensuring the lateral trapezoid closure of the SINTESI.

The assembly kit contains:

- Square cover with bigger dimensions than calculated, with a keder on one side and cut to size on the other side
- A profile with an eyelet, which has to be positioned diagonally beneath the traverse
- A two-part clip profile to fix the cover to the horizontal and vertical side
- Screw set
- As a standard, a CRISTAL cover is delivered, but other fabrics are optionally possible as well.

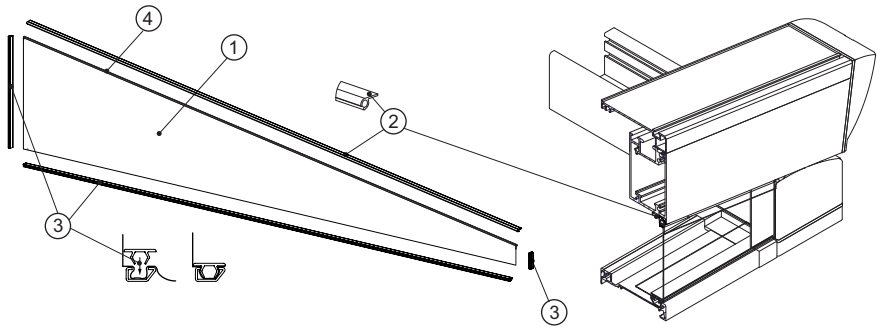

Legend

① Cover must be cut to size before the installation on site.

② Holding profile (Art.-No. 16010104)

③ Clip profile in two parts (basic profile art. no. 16010102 + clip profile art. no. 16010103)
Fixing with self-drilling head screws 3.5 x 9.5 mm

④ Seal keder (for keder Art.-No. 14700025)

Attention:

- If there is no vertical blind beneath the trapezoid kit, a transverse profile has to be ordered additionally. (see chapter: Additional profiles for lateral closures)

Installation scheme

Installation scheme of columns and brackets with SINTESI self-supporting

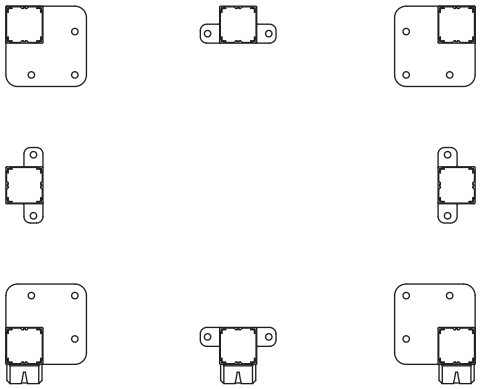

Installation scheme of columns and brackets with SINTESI with wall installation

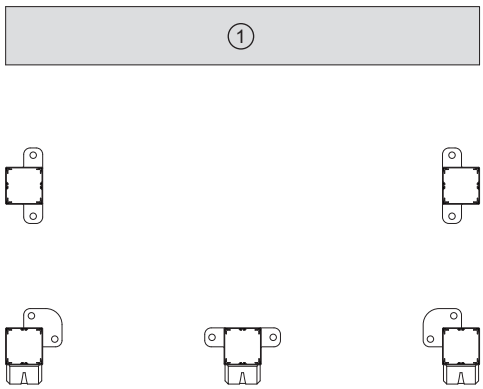

Legend

① Wall

Scheme: Fixing of the additional mounting plates

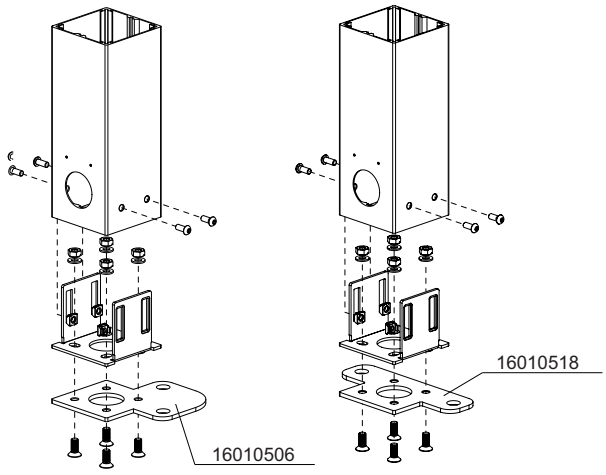

SINTESI FREE

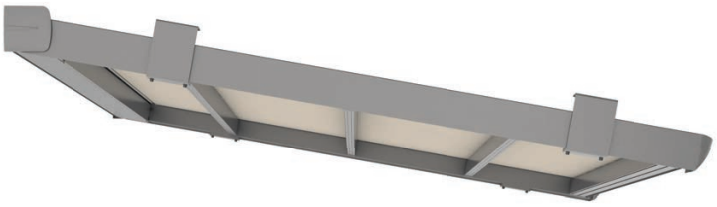



LED lighting in the cover profiles lights up the space underneath the pergola with a comfortable light.

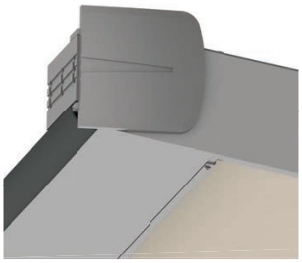

Connection profile for the perfect connection to the wall.

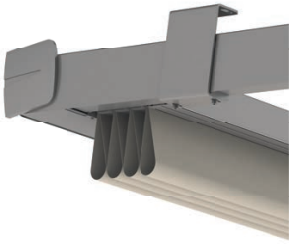

Due to the special guidance of the cover profiles, the entire cover package requires 20% less space than conventional systems

Limit sizes

	SINTESI FREE
Minimum complete width [mm]	1300
Maximum complete width [mm]	6000*
Minimum sloping projection [mm]	1000
Maximum sloping projection [mm]	6500*

* The specified drop applies up to a finished width of 5500 mm. From a complete width of 5501 mm, the sloping projection is limited to a maximum of 5110 mm.

Types of installation

SINTESI beneath existing frame

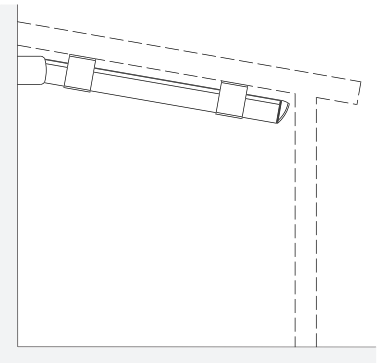

SINTESI between existing frame

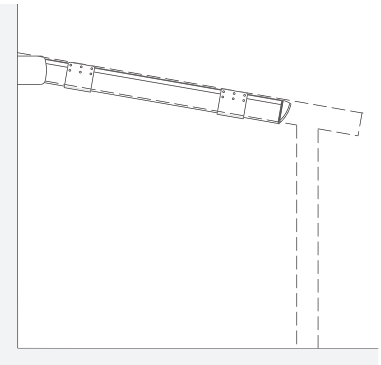

SINTESI between two walls

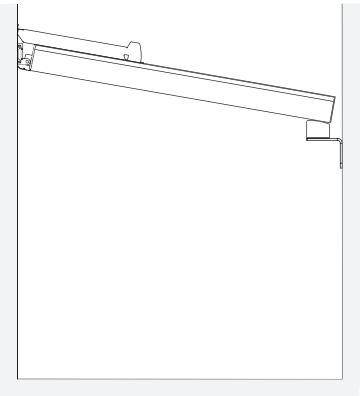

Scope of supply

- Folding pergola SINTESI FREE in freely selectable frame colour in matt and matt fine texture from the HELLA colour range
- Cover profiles identical to the frame colour
- Rain shelter in aluminium or optionally in PVC
- Weather sensor with wind, sun and temperature sensor for the basic module
- Frost detection, which automatically retracts the blind completely when the temperature falls below the set value
- Standard cover: OPATEX PRO
- Mounting brackets for wall and guide rails
- Operation by means of radio hand-held transmitter

Supplementary equipment

- Smart home control with the ONYX centre box for operation via smartphone, tablet, hand-held transmitter and wall-mounted transmitter or automations and patented live feedback on the position and movement of the shading element
- Cover profiles optionally in alternate colour on request
- Large selection of designs (waterproof and blackout PVC fabric)
- Integrated LED lighting in the cover profiles is optionally feasible
- Precipitation sensor for rain and snow detection
- Modular installation of several units next to each other
- Infrared radiant heater
- Patented moving of the cover profiles in between the guide rails
- Simple operation using the ONYX control system specially developed for sun protection products

Benefits of the product

- Heat protection
- Glare protection
- Privacy
- Weather protection
- Rain protection
- Protection against the cold
- Protection from UV radiation
- High wind stability
- Smart Home capable
- LED lighting for a pleasant ambience - optionally possible
- Patented live feedback on the position and movement of the shading element via the ONYX app
- Each pergola is made to measure and therefore a perfectly fitting solution for the terrace

SINTESI FREE

Standard

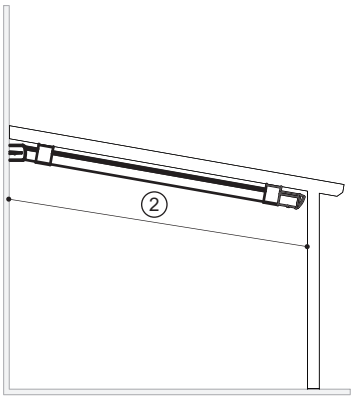

Additional module

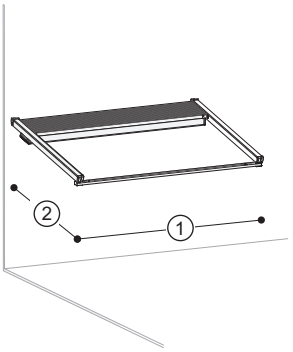

Legend

① Complete width (mm)
② Sloping projection (mm)

Brackets

Wall bracket Type A
Art. no. 16010510
(3 installation sets)

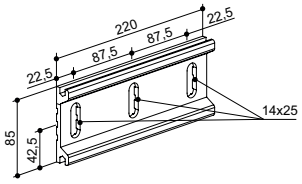

Wall bracket type C
Art. no. 16010532
(4 installation sets)

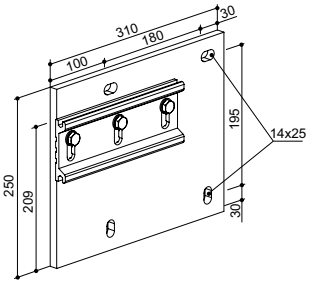

Wall bracket type D
Art. no. 16010533
(6 installation sets)

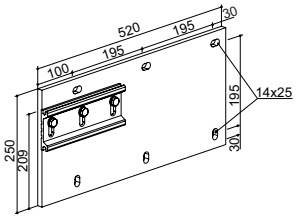

Wall bracket type I
Art. no. 16010536
(in conjunction with heavy-duty bracket)

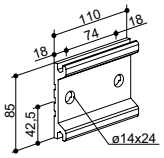

Wall bracket type B (double unit)
Art. no. 16010511
(3 installation sets)

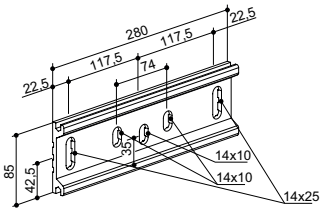

2x Wall bracket type C (double unit)
Art. no. 16010532
(8 installation sets)

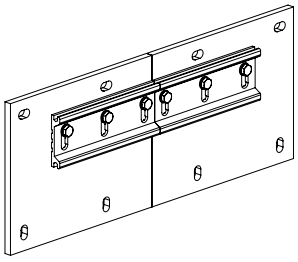

2x Wall bracket type D (double unit)
Art. no. 16010533
(12 installation sets)

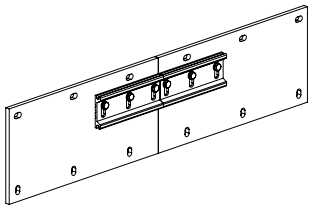

Mounting angle for side mounting FREE

Art. no. 16010504

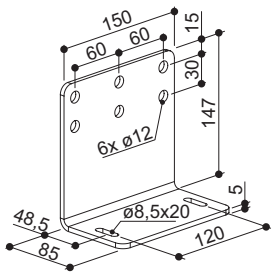

Mounting angle for cover mounting FREE

Art. no. 16010505

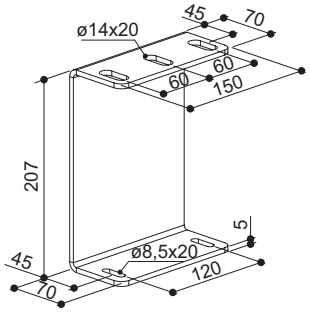

Mounting bracket for wall mounting on the drop-out side

Art. no. 16010507

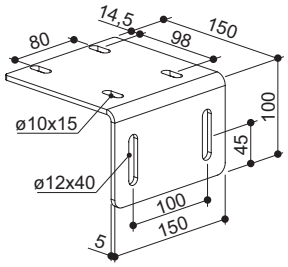

Mounting bracket for wall mounting on the drop side, with water drainage

Art. no. 16010540

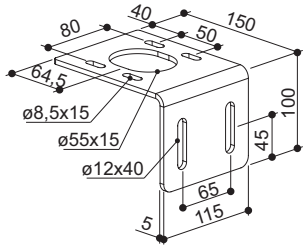

SINTESI FREE

Taking of measurements

Installation beneath existing frame

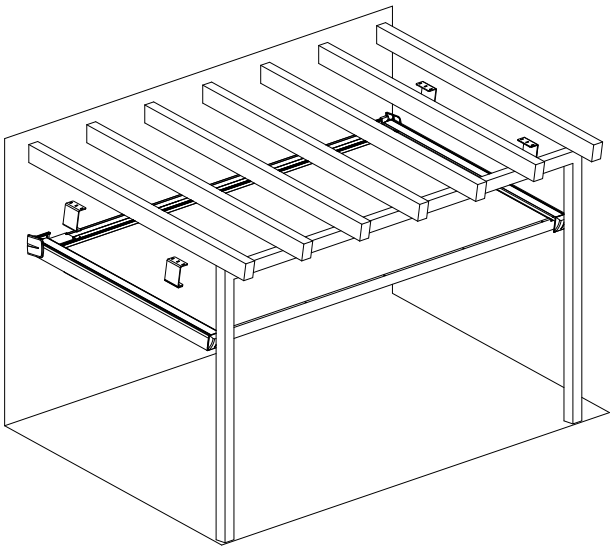

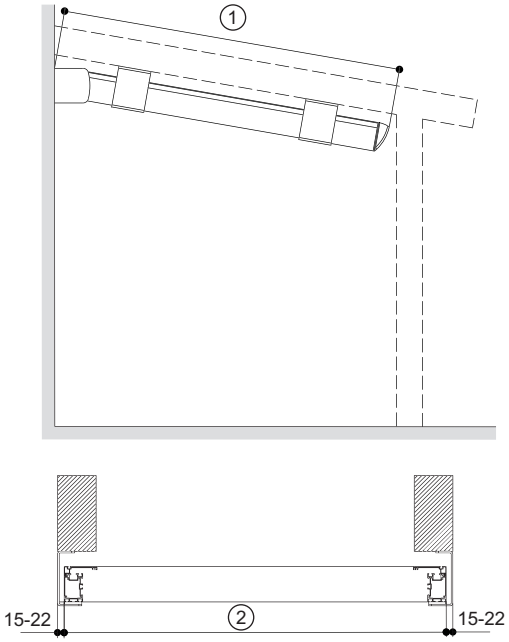

Legend

① Projection up to the outer edge of the guide rail covering
② Complete width

Installation between existing frame

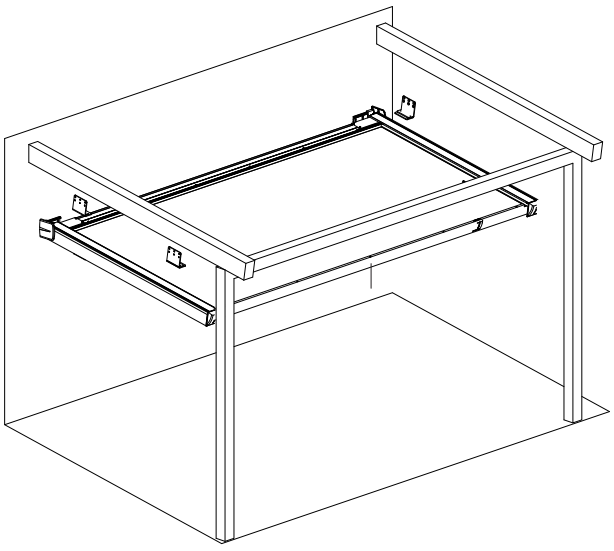

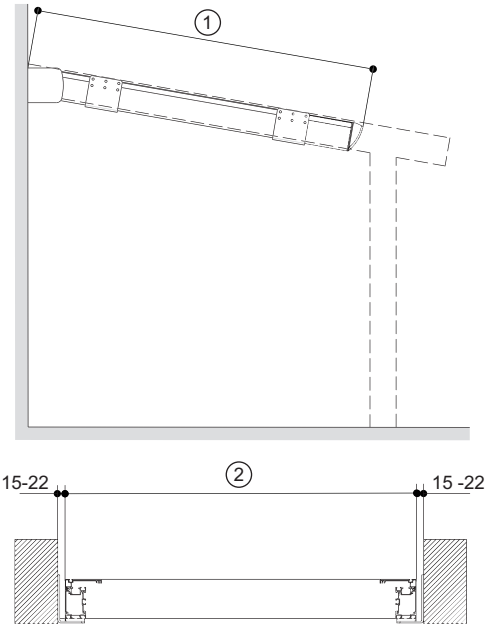

Legend

① Projection up to the outer edge of the guide rail covering
② Complete width

Installation between two walls

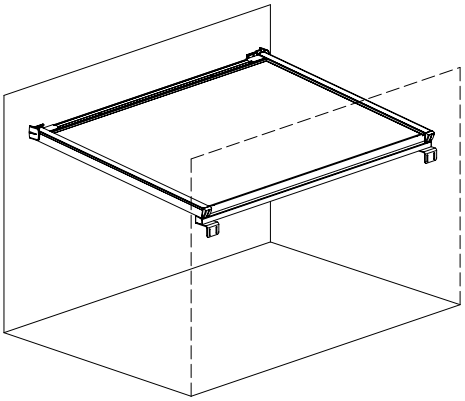

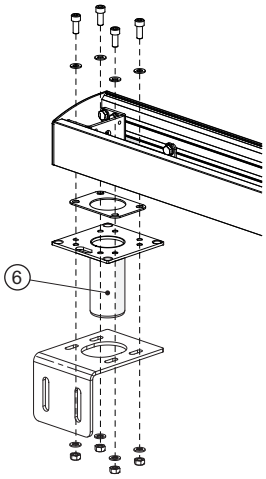

with rain shelter made of aluminium

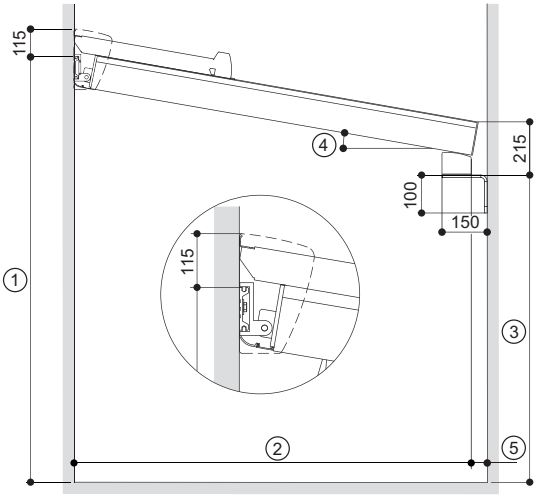

Legend

① Height up to the upper edge of the mounting bracket
② Projection up to the leading edge of the rain gutter
③ Height up to the lower edge of the rain gutter
④ Inclination
⑤ Outer edge of the rain gutter up to the wall
⑥ Water drainage outlet

SINTESI / SINTESI FREE

Weight in kg depending on the width

Projection [mm] \ Width [mm]	2000	2500	3000	3500	4000	4500	5000	5500	6000
1670	134	144	155	168	180	192	203	214	234
2360	147	158	169	182	194	207	219	231	252
3040	160	172	184	200	213	228	241	254	276
3730	174	187	199	215	229	244	259	273	295
4420	189	203	216	232	247	263	278	292	316
5110	201	215	230	247	264	281	297	313	348
5800	216	231	246	263	280	298	315	332	
6480	234	250	266	285	303	322	340	358	
7000	240	257	273	294	313	333	352	371	

Definition minimum inclination

Minimum inclination angles for water drain

Wall installation
Type of cover: OPATEX PRO

Projection [mm]		Complete width [mm]								
		2000	2500	3000	3500	4000	4500	5000	5500	6000
1670	Min. inclination angle	7°	7°	7°	7°	7°	7°	9°	9°	10°
	Cover profiles	1	1	1	1	1	1	1	2	2
	X [mm]	405	405	405	405	405	405	460	460	490
2360	Min. inclination angle	7°	7°	7°	7°	7°	7°	9°	9°	10°
	Cover profiles	2	2	2	2	2	2	2	3	3
	X [mm]	490	490	490	490	490	490	570	570	610
3040	Min. inclination angle	7°	7°	7°	7°	7°	7°	9°	9°	10°
	Cover profiles	3	3	3	3	3	3	3	4	4
	X [mm]	575	575	575	575	575	575	680	680	730
3730	Min. inclination angle	7°	7°	7°	7°	7°	7°	9°	9°	10°
	Cover profiles	4	4	4	4	4	4	4	5	5
	X [mm]	660	660	660	660	660	660	790	790	850
4420	Min. inclination angle	7°	7°	7°	7°	7°	8°	9°	9°	10°
	Cover profiles	5	5	5	5	5	5	5	6	6
	X [mm]	740	740	740	740	740	820	895	895	975
5110	Min. inclination angle	7°	7°	7°	7°	8°	8°	9°	9°	10°
	Cover profiles	6	6	6	6	6	6	6	7	7
	X [mm]	830	830	830	830	920	920	1005	1005	1100
5800	Min. inclination angle	8°	8°	8°	8°	8°	8°	9°	9°	
	Cover profiles	7	7	7	7	7	7	7	8	
	X [mm]	1015	1015	1015	1015	1015	1015	1115	1115	
6500	Min. inclination angle	8°	8°	8°	8°	9°	9°	9°	9°	
	Cover profiles	8	8	8	8	8	8	8	9	
	X [mm]	1110	1110	1110	1110	1225	1225	1225	1225	

Attention:

- The values given in the table are approximate values and must always be determined by way of calculation.
- The minimum inclination angle with SOLTIS Proof W96 is 10°.

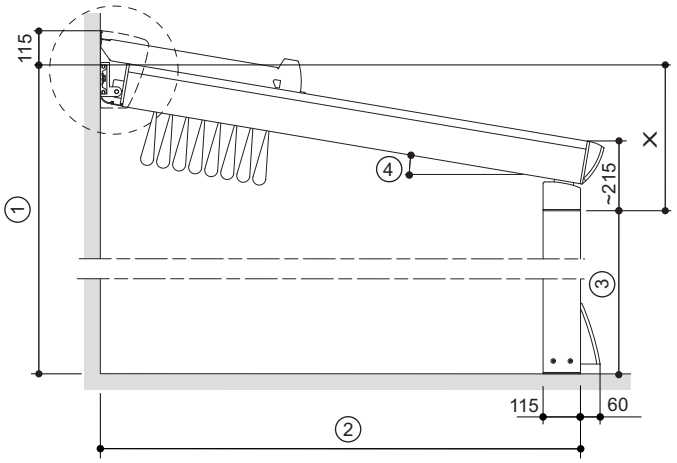

Legend

① Height up to the upper edge of the mounting bracket
② Projection up to the outer edge of the column
③ Height up to the lower edge of the rain gutter
④ Inclination
x Upper edge of the mounting bracket up to the lower edge of the rain gutter (approx. dimensioning specification)

SINTESI / SINTESI FREE

Number of mounting brackets per module

Module with 2 brackets

Module <= 4000 mm

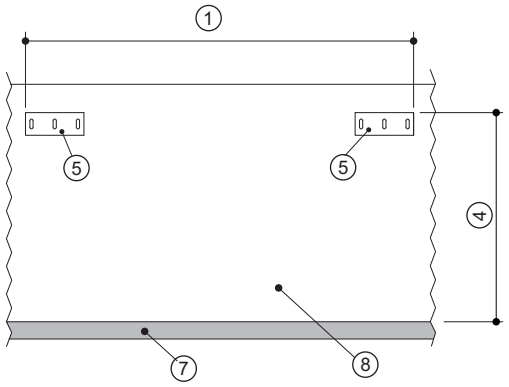

Module with 3 brackets

4000 mm < Module <= 5500 mm

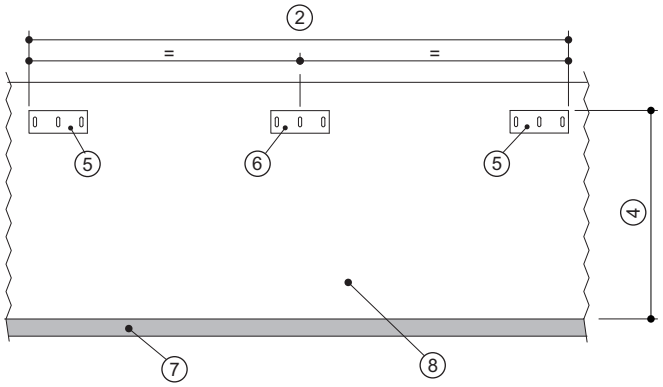

Module with 4 brackets

Module > 5500 mm

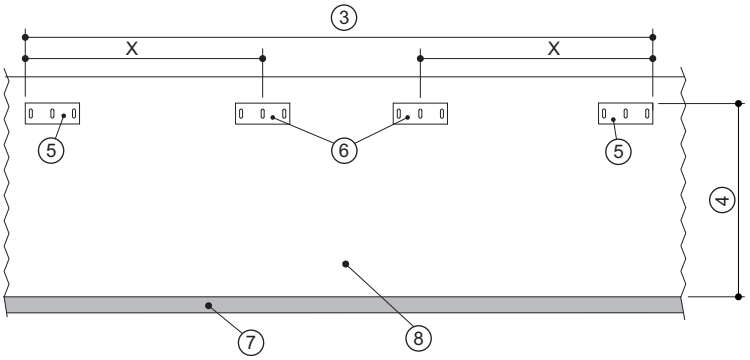

Formula to calculate the space between the brackets:

$$x = 570 + (FB - 1140) / 3$$

Legend

① Complete width <= 4000 mm
② 4000 mm < complete width <= 5500 mm
③ Complete width > 5500 mm
④ Complete height
⑤ Bracket (Type A)
⑥ Centred bracket (Type A)
⑦ Floor
⑧ Wall

2 Modules

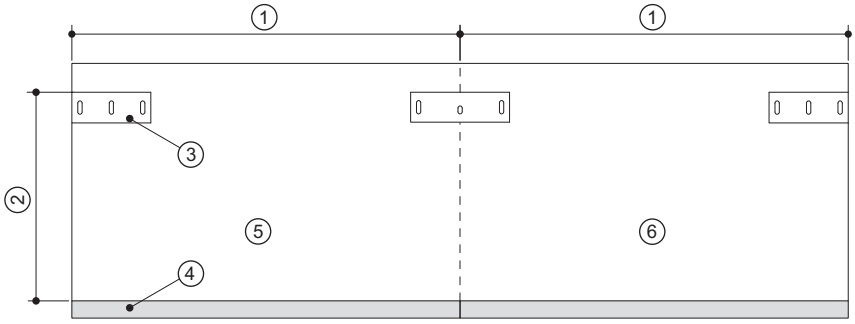

3 or more modules

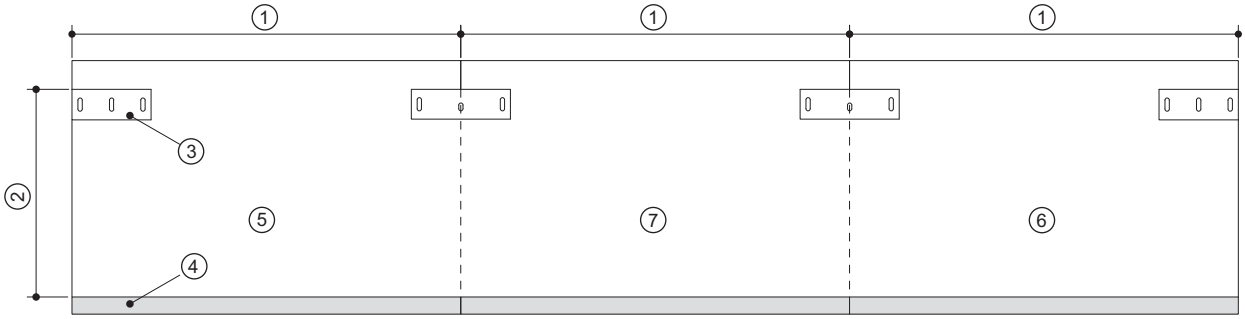

Space required laterally (with rain shelter PVC)

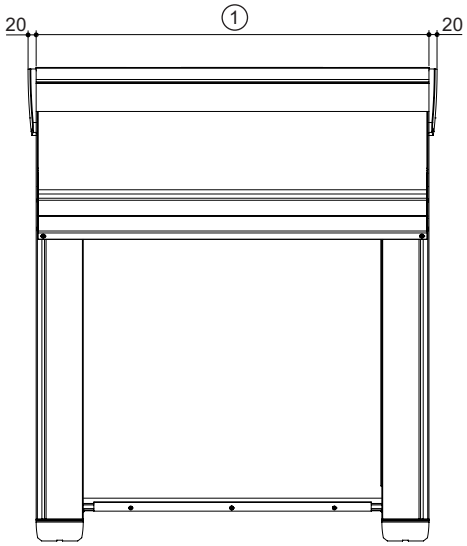

Space required laterally (with rain shelter made of aluminium)

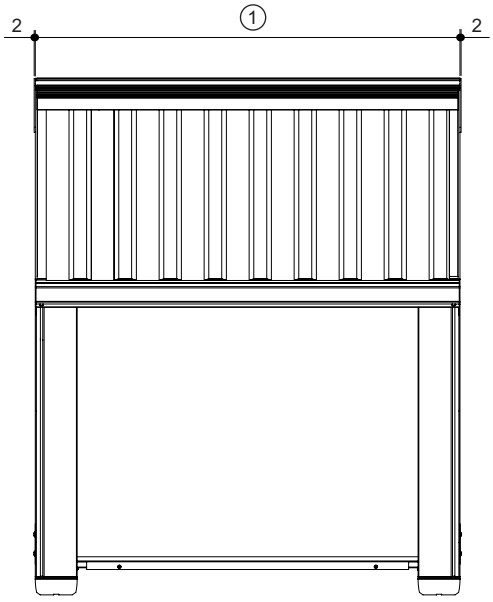

Legend

① Width single unit
② Height up to the upper edge of the mounting bracket
③ Bracket
④ Floor
⑤ Basic module
⑥ Additional module end element
⑦ Additional module middle element

Notes:

- If a PVC roof is provided, the lateral end caps protrude by 20 mm!
- If an aluminium roof is provided, the lateral end caps protrude by 2 mm!

SINTESI / SINTESI FREE

Wall brackets

Cross section of the mounting plate

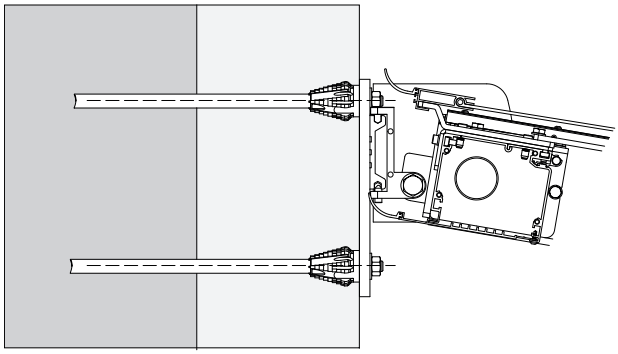

Heavy-duty brackets

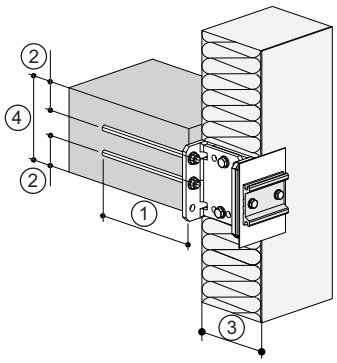

Ceiling thickness up to 200 mm
(Prices see chapter “Installation technique”)

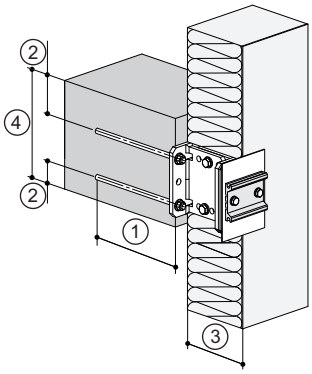

Ceiling thickness > 200 mm
(Prices see chapter “Installation technique”).

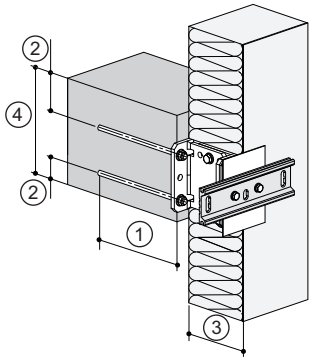

Heavy-duty bracket in combination with wall bracket with double units
(Prices see chapter “Installation technique”)

Legend

① Anchorage depth
② Distance from the edge min. 55 mm
③ ETICS
④ Thickness of the ceiling

Direct fixing between rain gutter and TERRA SIDE

with sealing screws

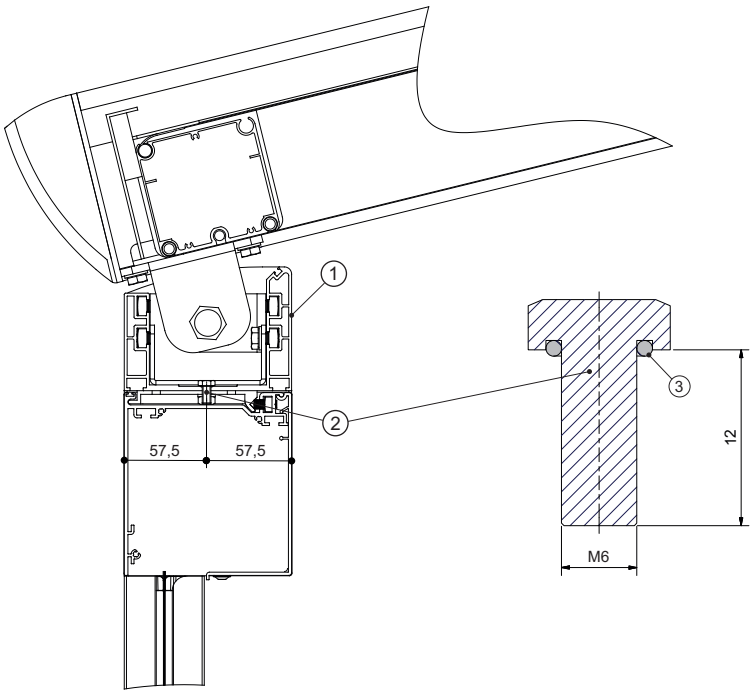

Note:

Direct fixing of the box to the rain gutter of the SINTESI with a sealing screw.

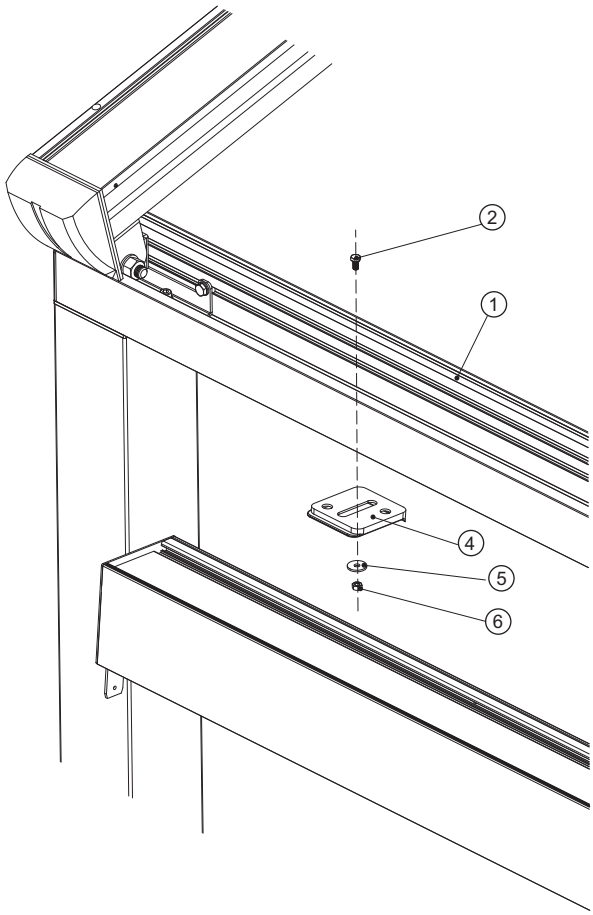

Legend

① Rain gutter
② Sealing screw M6x12
③ O-Ring sealing
④ Ceiling bracket for TERRA SIDE
⑤ Plain washer
⑥ Hexagon nut M6

Attention:

If on the ordering sheet the option “delivery together with TERRA SIDE” the selection AT THE FRONT is chosen, the rain gutter is provided with boreholes to fix the box of the TERRA SIDE.
This is only recommended, if a TERRA SIDE is ordered at the same time.

SINTESI / SINTESI FREE

Installation situation for different wall constructions

Mounting base: Concrete wall plastered

Wall installation and anchoring in the CONCRETE CEILING
with impact anchor

Vertical section

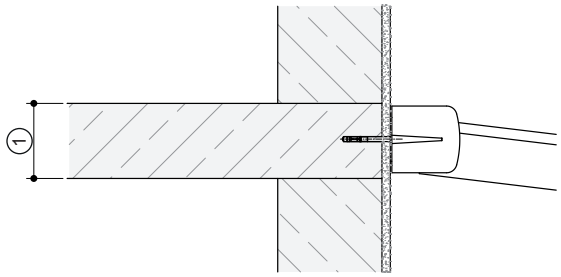

Horizontal section

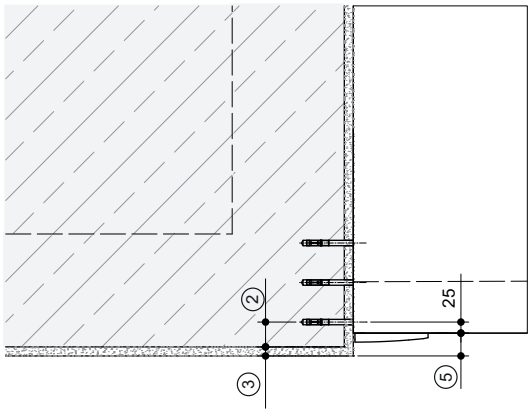

Horizontal section with 2 units at the corner of the wall

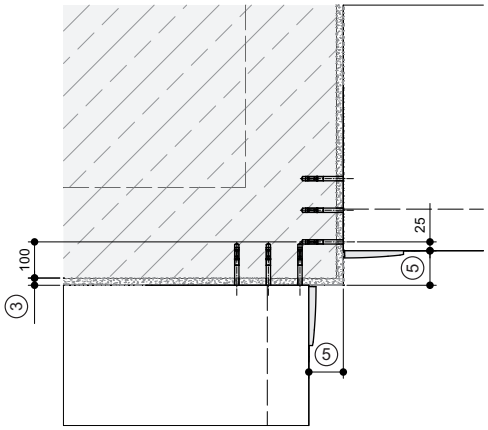

Wall installation to the CONCRETE WALL
with impact anchor

Vertical section

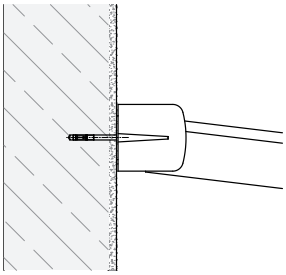

Horizontal section

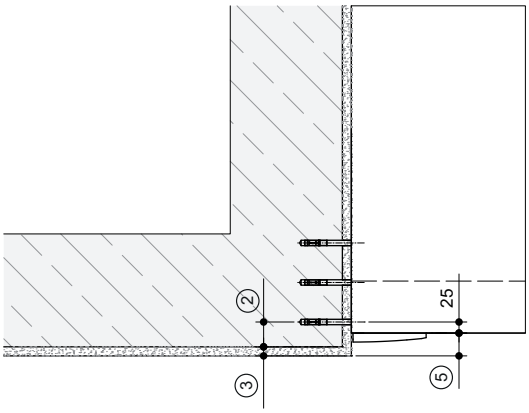

Horizontal section with 2 units at the corner of the wall

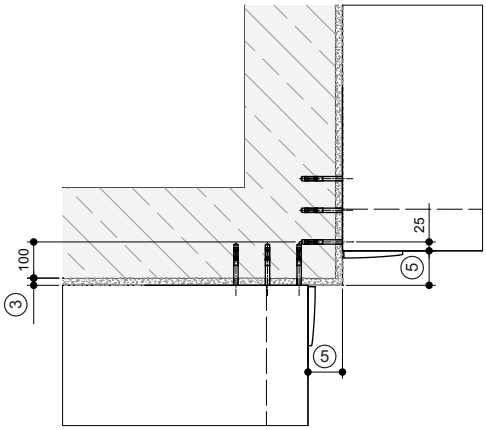

Legend

① Thickness of the ceiling
② Minimum distance to the edge
③ Plaster/insulation thickness
⑤ Offset

Mounting base: Concrete wall plastered

Wall mounting in the concrete wall - with cross profile
with bracket type C off-set mounted
with impact anchor

Vertical section

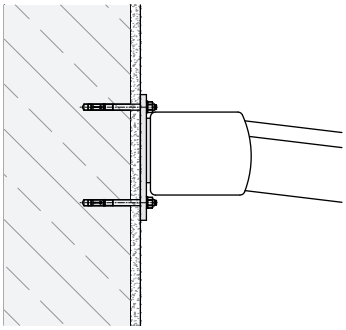

Horizontal section

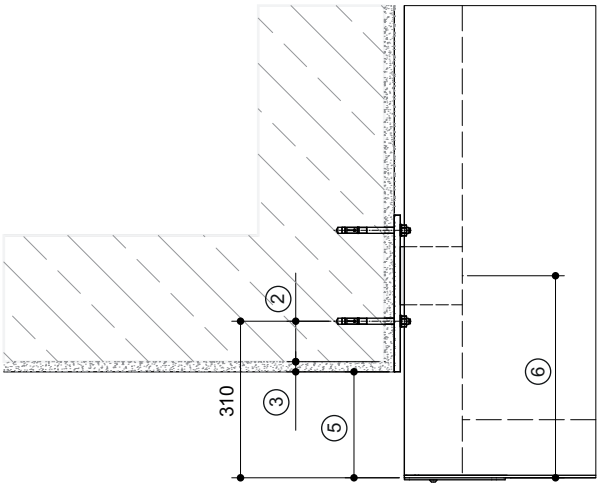

Legend

② Minimum distance to the edge
③ Plaster/insulation thickness
⑤ Offset
⑥ Bracket offset 400 mm

SINTESI / SINTESI FREE

Installation situation for different wall constructions

Mounting base: Concrete wall with ETICS

Wall installation and anchoring in the CONCRETE CEILING
Heavy-duty bracket glued

Vertical section

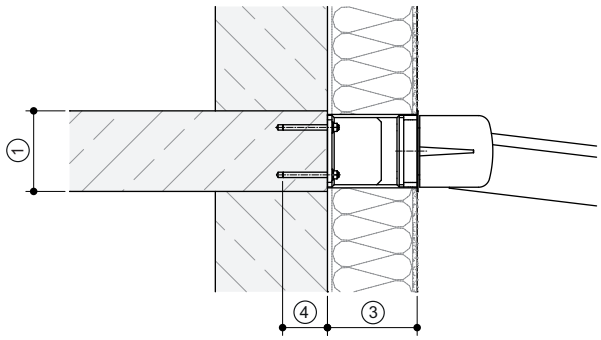

Horizontal section

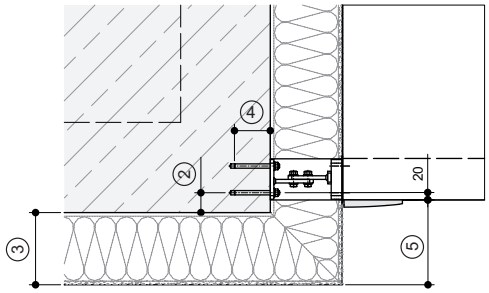

Horizontal section with 2 units at the corner of the wall

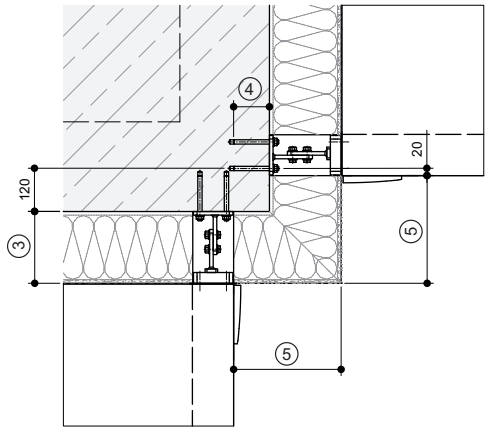

Wall installation to the CONCRETE WALL
Heavy-duty bracket glued

Vertical section

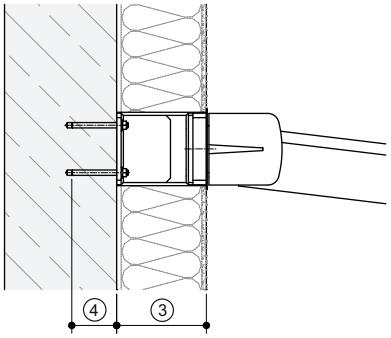

Horizontal section

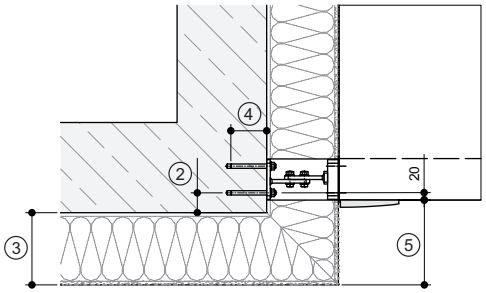

Horizontal section with 2 units at the corner of the wall

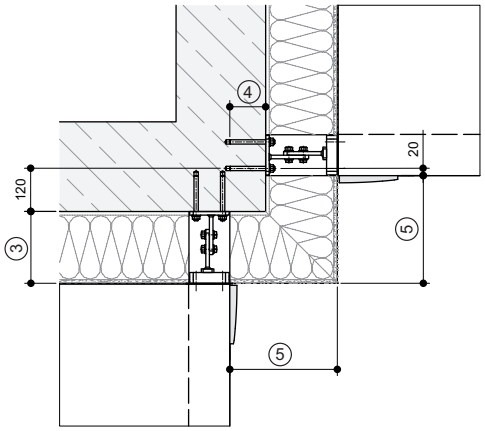

Legend

① Thickness of the ceiling
② Minimum distance to the edge
③ Plaster/insulation thickness
④ Anchorage depth
⑤ Offset

Mounting base: Brick wall with ETICS

Wall installation and anchoring in the CONCRETE CEILING
Heavy-duty bracket glued

Vertical section

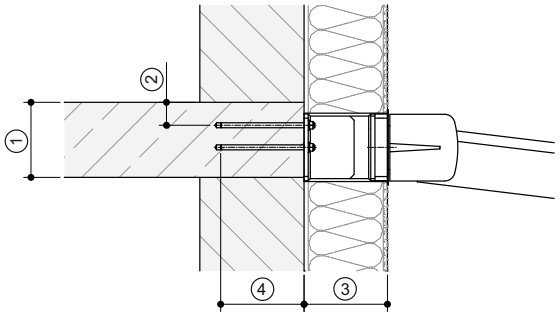

Horizontal section

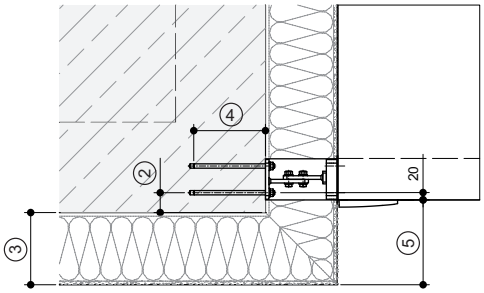

Horizontal section with 2 units at the corner of the wall

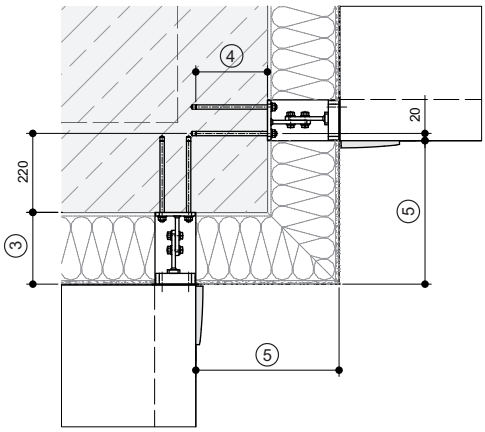

Wall installation in BRICK WALL
Bracket type C
with Thermax and anchor sleeve

Vertical section

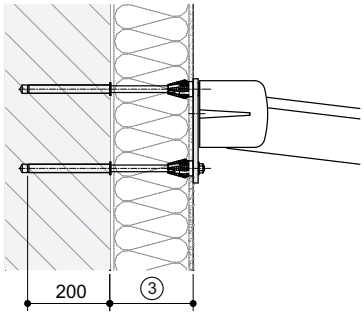

Horizontal section

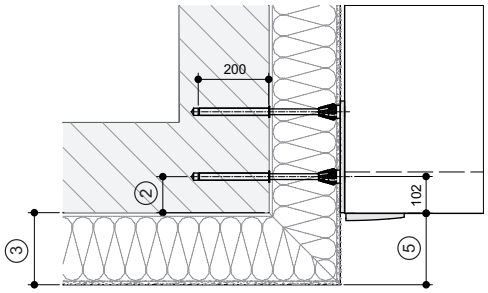

Horizontal section with 2 units at the corner of the wall

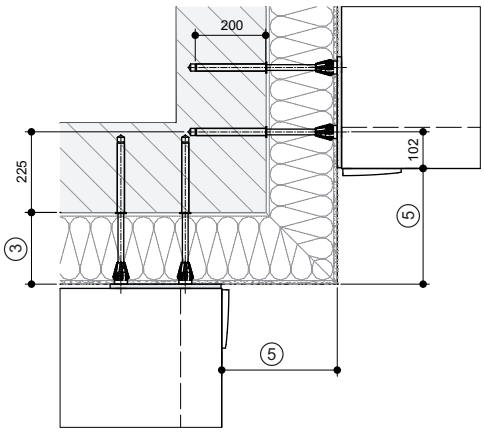

Legend

① Thickness of the ceiling
② Minimum distance to the edge
③ Plaster/insulation thickness
④ Anchorage depth
⑤ Offset

SINTESI / SINTESI FREE

Installation situation for different wall constructions

Mounting base: Brick wall with ETICS

Wall mounting in the BRICK WALL - with cross profile
Bracket type C off-set mounted
with Thermax and anchor sleeve

Vertical section

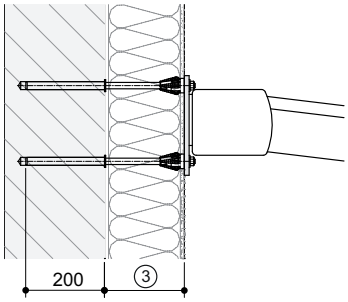

Horizontal section

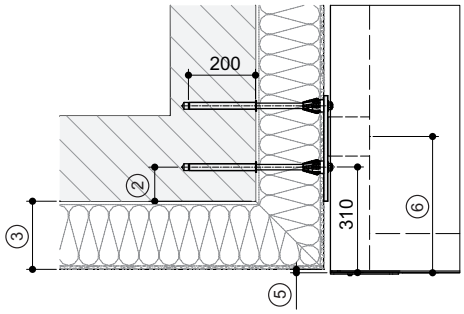

Horizontal section with 2 units at the corner of the wall

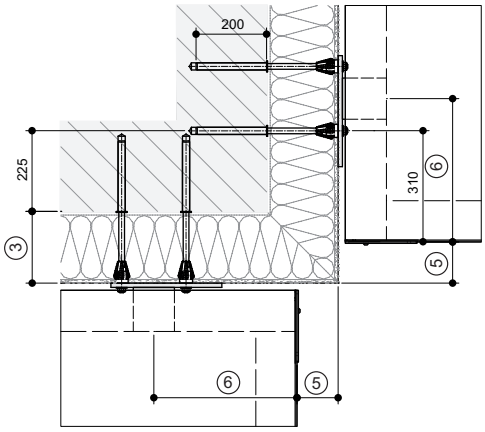

Wall mounting in the BRICK WALL - with cross profile
Bracket type D off-set mounted
with Thermax and anchor sleeve

Vertical section

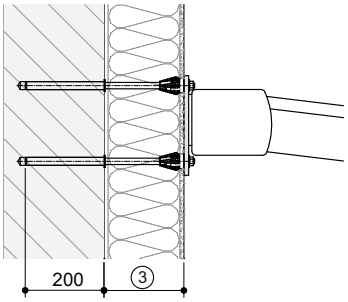

Horizontal section

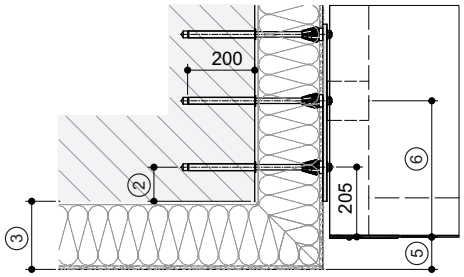

Horizontal section with 2 units at the corner of the wall

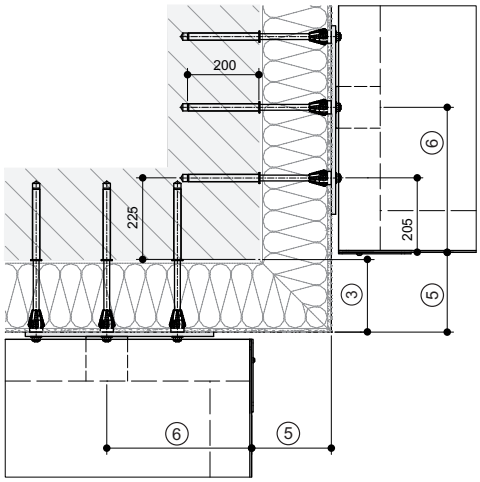

Legend

② Minimum distance to the edge
③ Plaster/insulation thickness
⑤ Offset
⑥ Bracket offset 400 mm

Mounting base: Brick with rust insulation without breeze block

Wall installation and anchoring in the CONCRETE CEILING
Heavy-duty bracket glued

Vertical section

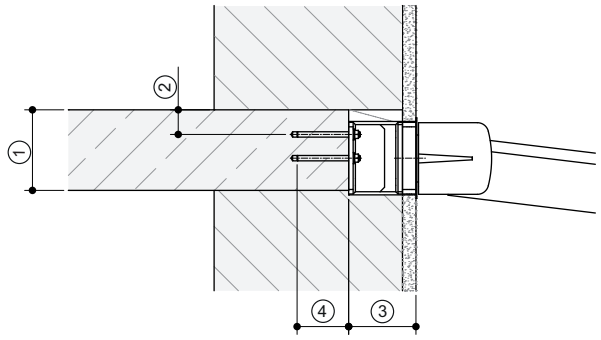

Horizontal section

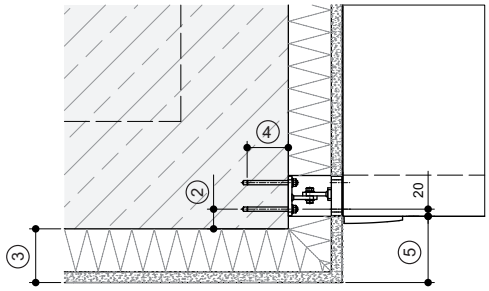

Horizontal section with 2 units at the corner of the wall

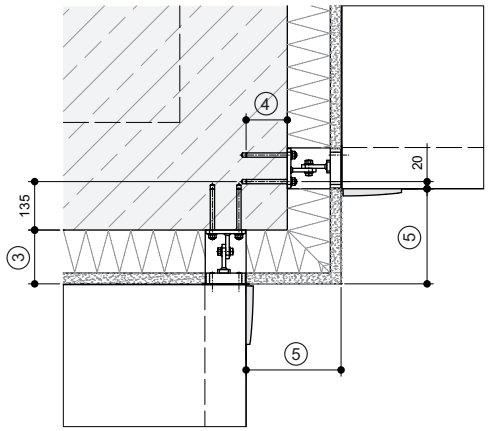

Wall installation in BRICK WALL
Bracket type C
glued-in with anchor sleeve

Vertical section

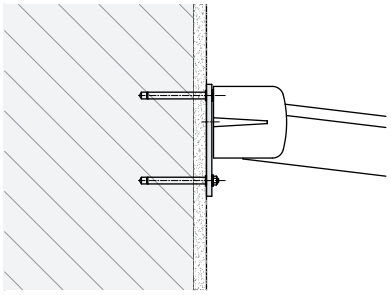

Horizontal section

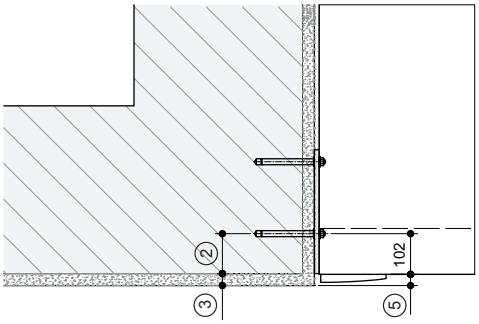

Horizontal section with 2 units at the corner of the wall

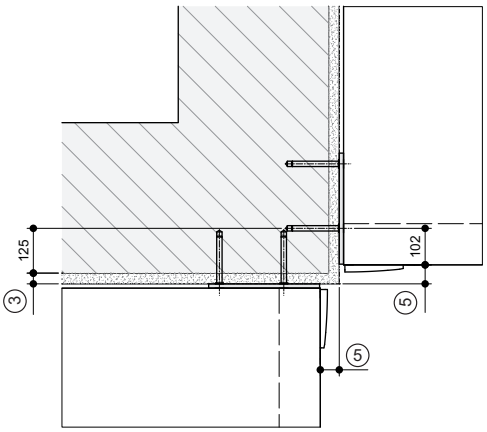

Legend

①	Thickness of the ceiling	④	Anchorage depth
②	Minimum distance to the edge	⑤	Offset
③	Plaster/insulation thickness		

SINTESI / SINTESI FREE

Installation situation for different wall constructions

Mounting base: Brick with rust insulation and breeze block

Wall installation and anchoring in the CONCRETE CEILING
Heavy-duty bracket glued

Vertical section

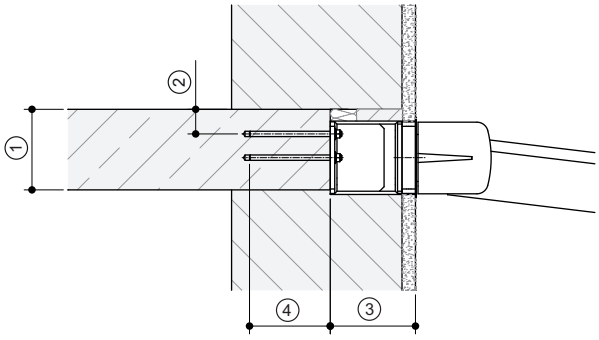

Horizontal section

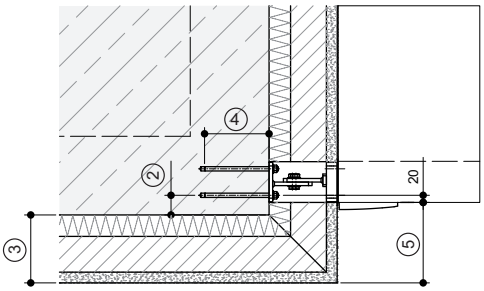

Horizontal section with 2 units at the corner of the wall

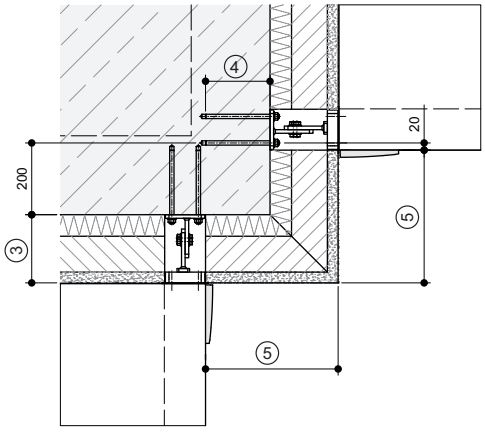

Wall installation in BRICK WALL
Bracket type C
glued-in with anchor sleeve

Vertical section

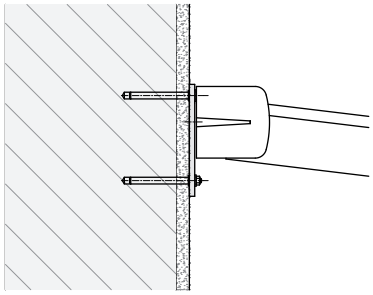

Horizontal section

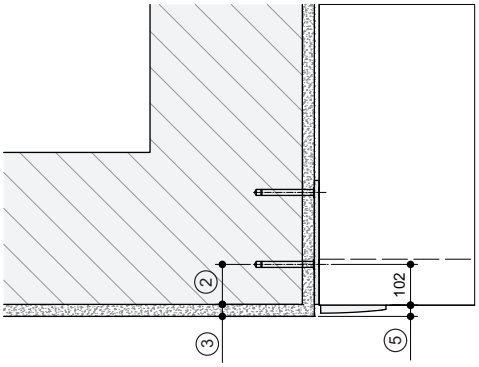

Horizontal section with 2 units at the corner of the wall

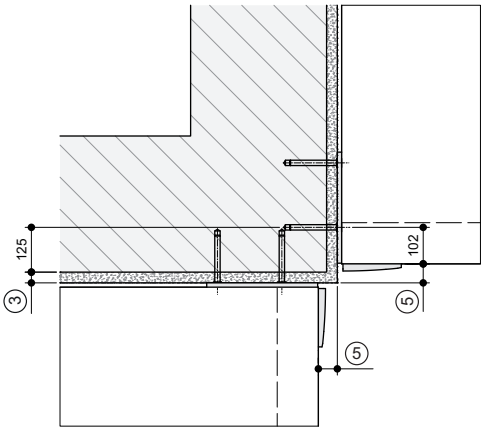

Legend

① Thickness of the ceiling
② Minimum distance to the edge
③ Plaster/insulation thickness
④ Anchorage depth
⑤ Offset

Cable exits

Cable exit, power supply

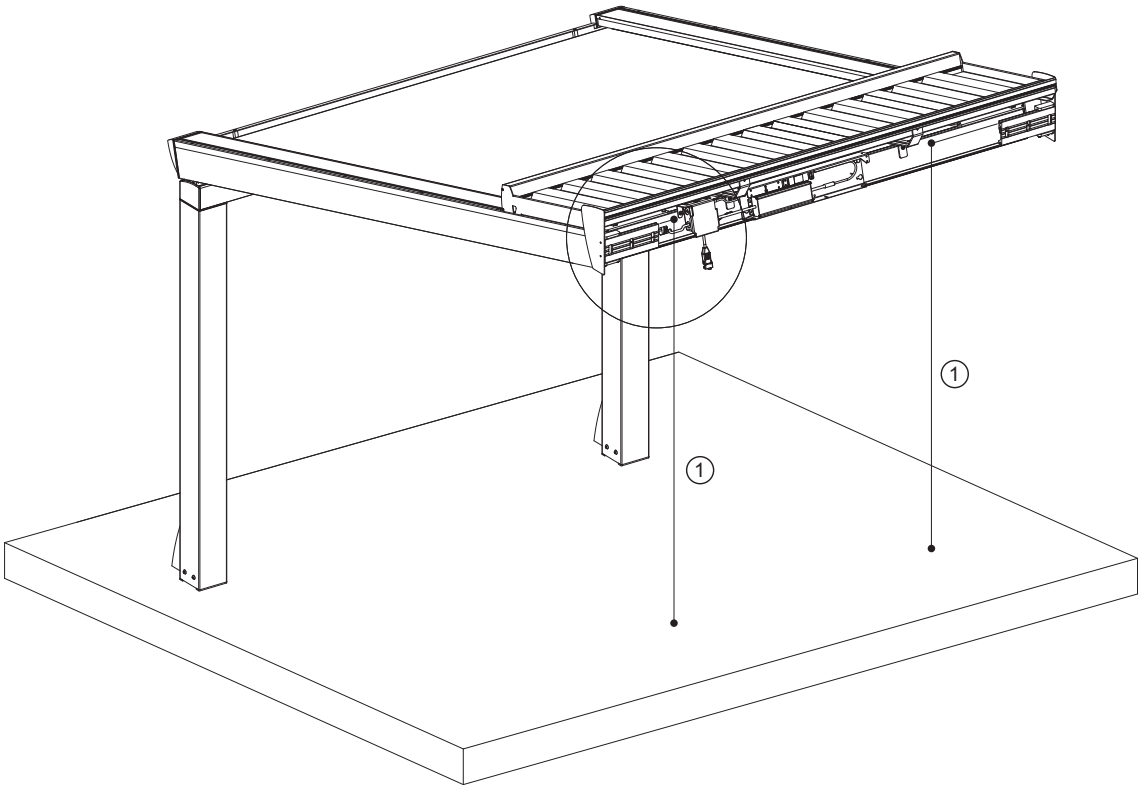

Cable exit Standard

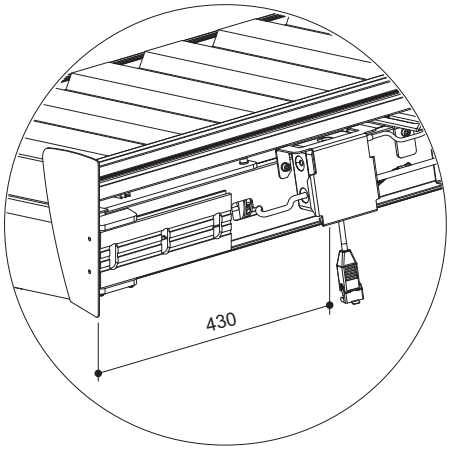

Legend

① Height up to the upper edge of the mounting bracket

SINTESI / SINTESI FREE

Cable preparation in the guide rail (cable 230V) for TERRA SIDE at the front

Only SINTESI

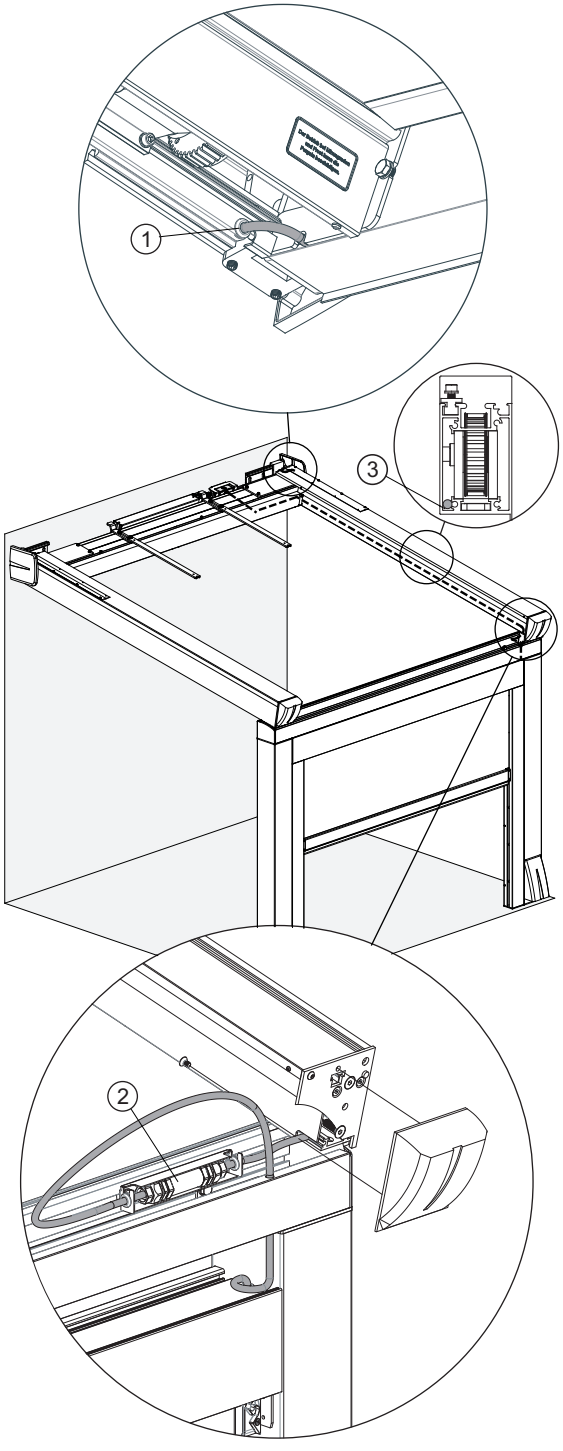

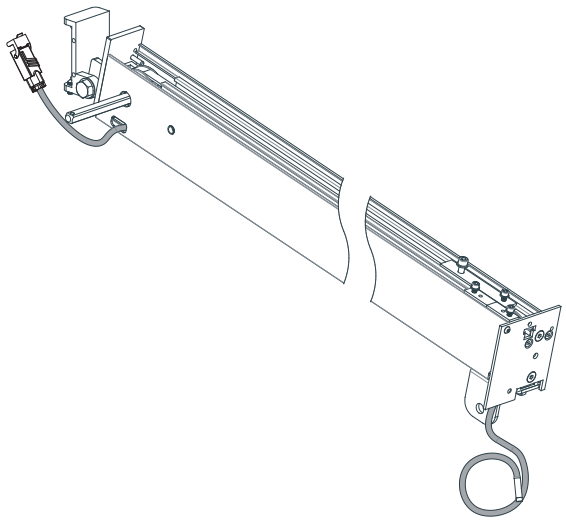

Legend

① Cable duct in keyhole
② Cable connection with holding device
③ Cable guiding in guide rail

Note:

- Cable preparation (incl. cable with STAS 3 on the back and an open cable end at the front) over the guide rail all the way to the front rain gutter for supplying power to a TERRA SIDE.
- If ordering a TERRA SIDE **in front** at the same time, this selection is mandatory. However, it is also recommended for an intended retrofitting at a later point in time.

Electrical data

schematic wiring diagram with ONYX

Wall/ceiling installation

A detailed circuit diagram can be found in the installation instructions for the SINTESI.

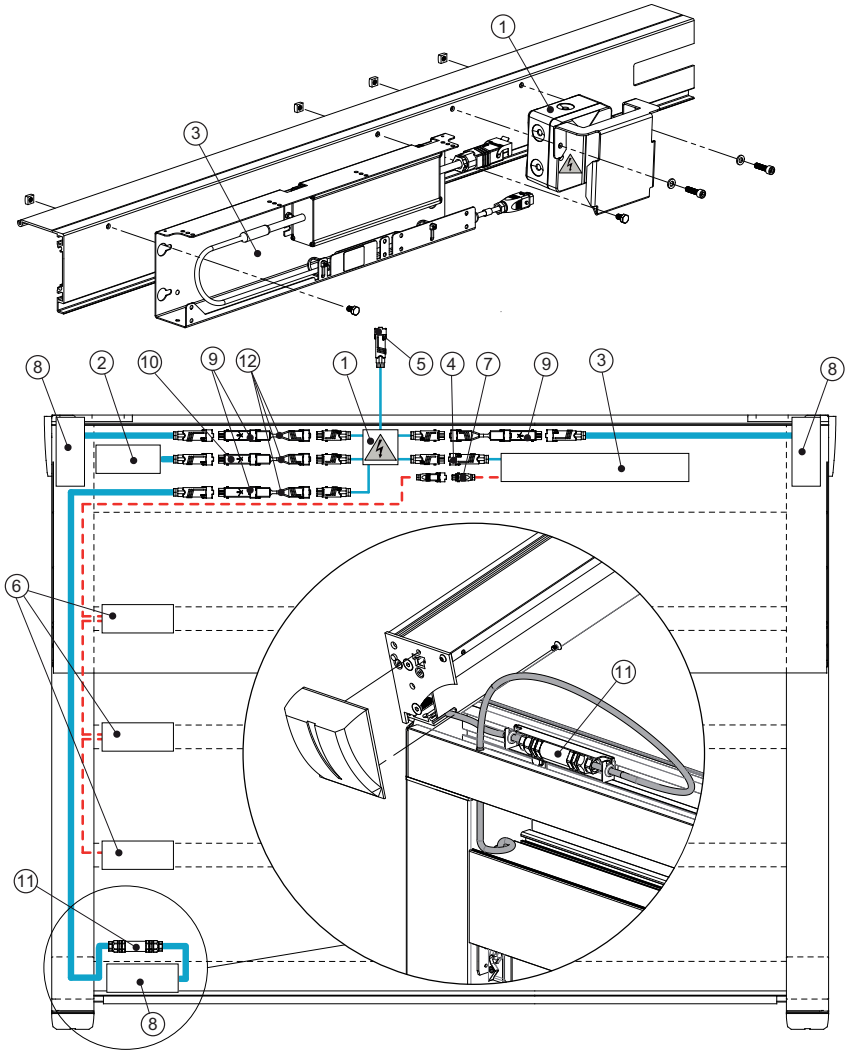

Legend

- 24V LED lighting 2-pole (+/-)
- 230V Voltage supply 3-pole (L/N/PE)
- 230V Voltage supply 4-pole (L/L/N/PE)

① Junction box (230V)
② Drive for SINTESI
③ Control unit for LED ONYX
④ Hirschmann plug connection STAS 3 / STAK 3 for LED control unit
⑤ Main connector (230V)
⑥ LED stripes (24V)
⑦ Hirschmann plug connection STAS 2/STAK 2 for LED lighting
⑧ Drive for TERRA SIDE (230V)
⑨ ONYX.CONNECTOR with Hirschmann plug connection STAS 3/STAK 3 for TERRA SIDE drive (230V)
⑩ ONYX.CONNECTOR with Hirschmann plug connection STAS 3/STAK 3 for SINTESI drive (230V)
⑪ Cable connector IP68 for TERRA SIDE drive (230V), 4-pole
⑫ Adapter plug for the control ONYX.CONNECTOR

SINTESI / SINTESI FREE

Electrical data

schematic wiring diagram with ONYX

Only SINTESI self-supporting system

A detailed circuit diagram can be found in the installation instructions for the SINTESI.

Front part identical to wall/ceiling installation; supply line via rear column

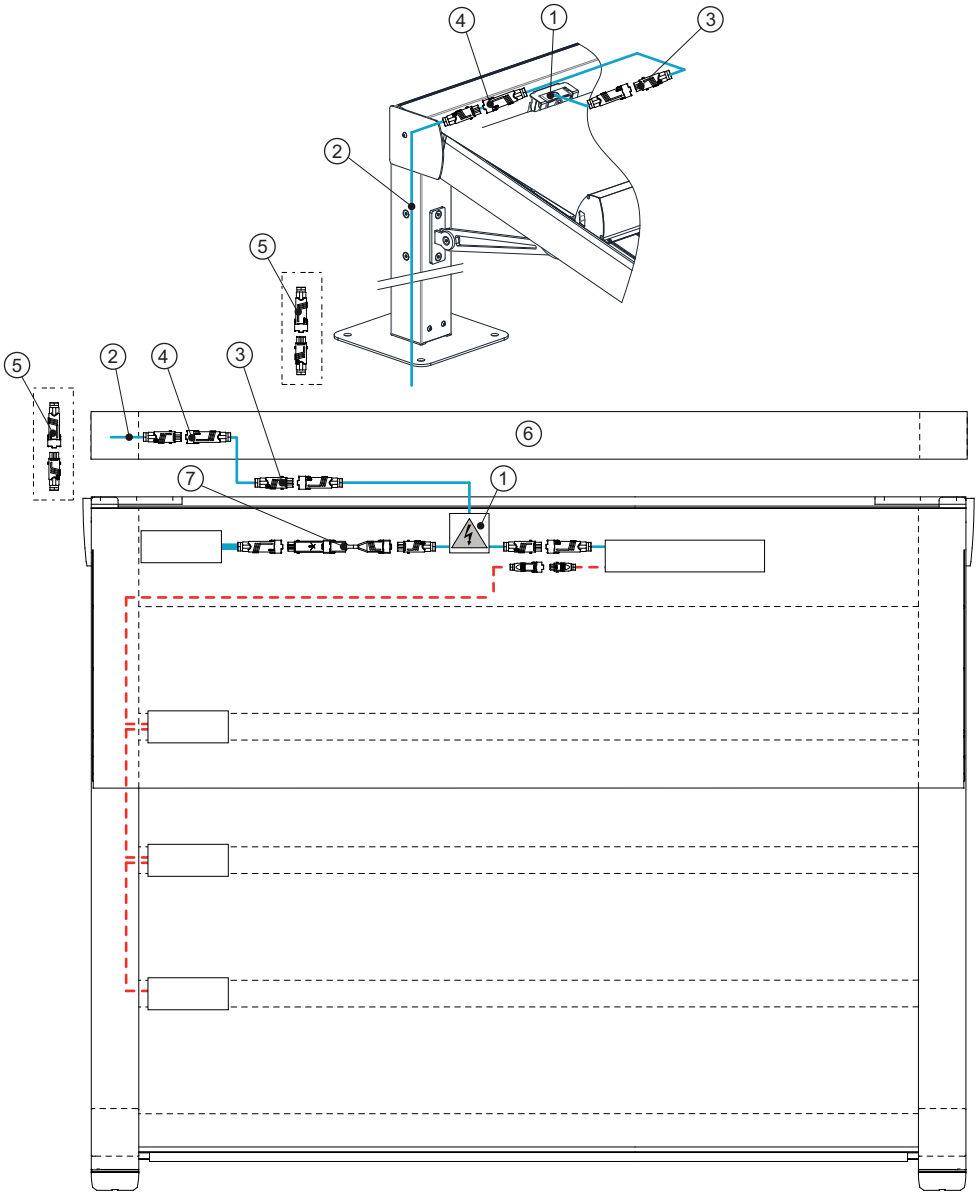

Legend

- 24V LED lighting 2-pole (+/-)
- 230V Voltage supply 3-pole (L/N/PE)
- 230V Voltage supply 4-pole (L/L/N/PE)

① Junction box (230V)
② Main connector (230V)
③ Hirschmann plug connection STAS 3/STAK 3 for supply line (230)
④ Hirschmann plug connection STAS 3/STAK 3 for supply line in transverse profile (230V)
⑤ Hirschmann plug connection STAS 3/STAK 3 for supply line loosely enclosed (230V)
⑥ Transverse profile
⑦ Adapter plug for the control ONYX.CONNECTOR

schematic wiring diagram with Somfy io

Wall/ceiling installation

A detailed circuit diagram can be found in the installation instructions for the SINTESI.

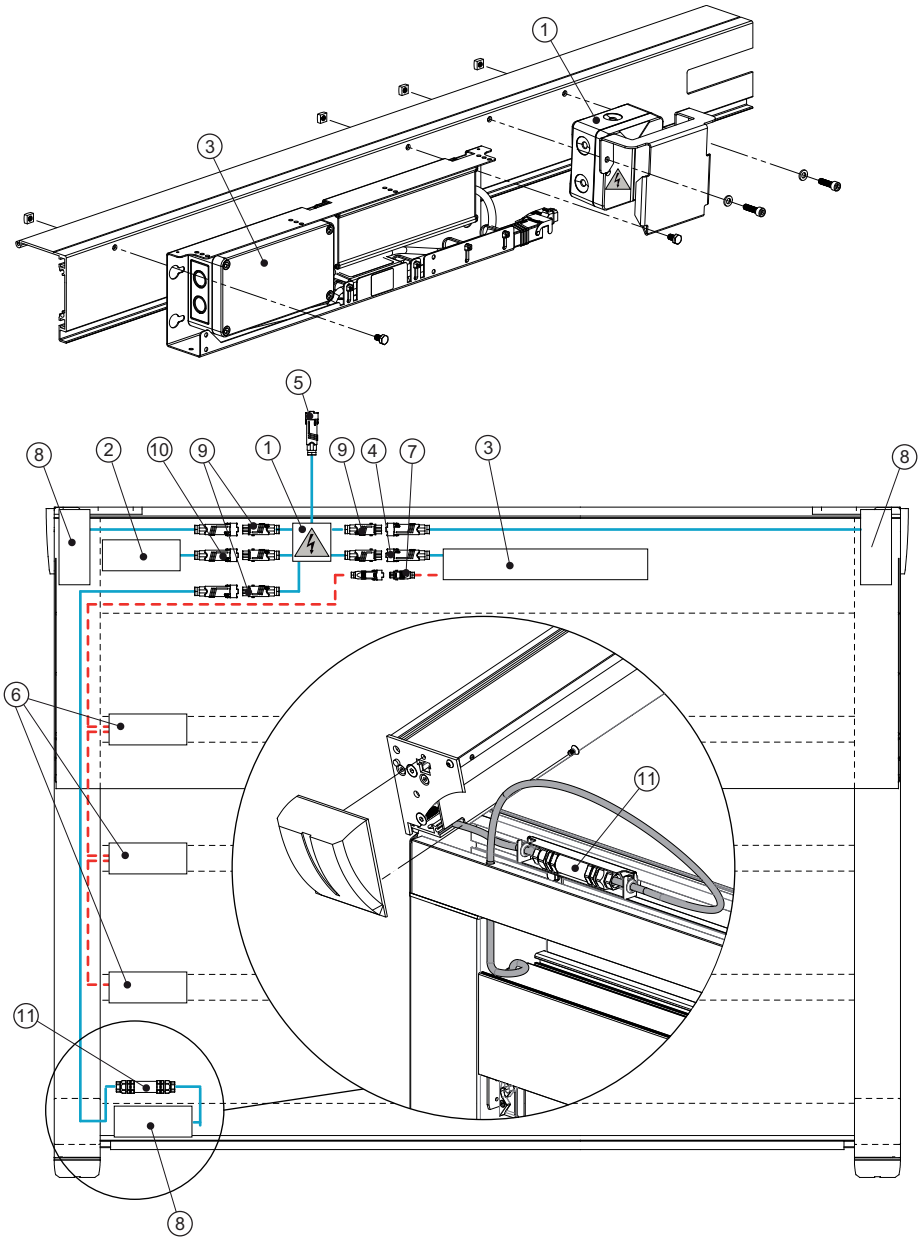

Legend

- 24V LED lighting 2-pole (+/-)
- 230V Voltage supply 3-pole (L/N/PE)

① Junction box (230V)
② Drive for SINTESI
③ Control unit for LED lighting
④ Hirschmann plug connection STAS 3/STAK 3 for LED control unit (230V)
⑤ Main connector (230V)
⑥ LED stripes (24V)
⑦ Hirschmann plug connection STAS 2/STAK 2 for LED lighting
⑧ Drive for TERRA SIDE (230V)
⑨ Hirschmann plug connection STAS 3/STAK 3 for TERRA SIDE drive (230V)
⑩ Hirschmann plug connection STAS 3/STAK 3 for SINTESI drive (230V)
⑪ Cable connector IP68 for TERRA SIDE drive (230V), 3-pole

SINTESI / SINTESI FREE

Electrical data

schematic wiring diagram with Somfy io

Only SINTESI self-supporting system

A detailed circuit diagram can be found in the installation instructions for the SINTESI.

Front part identical to wall/ceiling installation; supply line via rear column

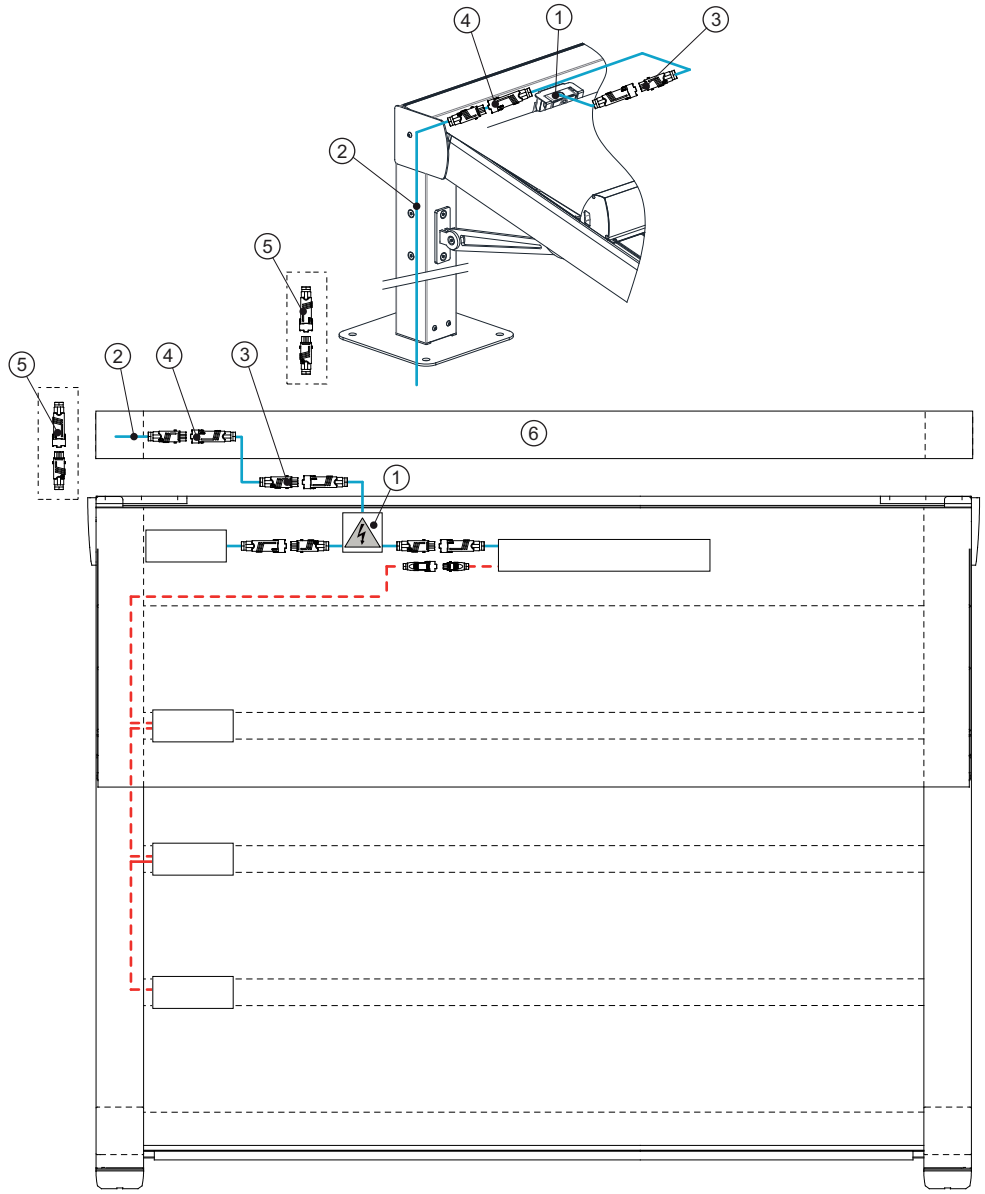

Legend

- 24V LED lighting 2-pole (+/-)
- 230V Voltage supply 3-pole (L/N/PE)

① Junction box (230V)
② Main connector (230V)
③ Hirschmann plug connection STAS 3/STAK 3 for supply line (230)
④ Hirschmann plug connection STAS 3/STAK 3 for supply line in transverse profile (230V)
⑤ Hirschmann plug connection STAS 3/STAK 3 for supply line, loosely enclosed (230V)
⑥ Transverse profile

TERRA SIDE



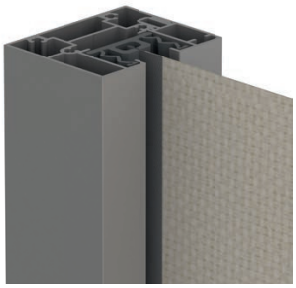

Gap-free cover guidance and high wind stability.



Easy installation, even retrofitted to the SINTESI

Limit sizes

	TERRA SIDE	
Box size	115	130
Single unit		
Minimum width [mm]	800	800
Maximum width [mm]	4500	6000
Maximum height [mm]	2500	3000
Maximum surface [m^2]	11.5	18

	Glass fibre fabric	Polyester- PVC-coated	SOLTIS Veozip - Color	Polyester fabric - PVC-free/ acrylic fabric	Waterproof fabric
Box size 115					
Max. width [mm]	4500	4500	4500	4500	4500
Max. sloping projection [mm]	2500	2500	2500	2500	2500
Max. area [m^2]	11.5	11.5	11.5	11.5	11.5
Box size 130					
Max. width [mm]	6000	4500	6000	6000	4500
Max. sloping projection [mm]	3000	3000	3000	2500	3000
Max. area [m^2]	18	13.5	18	15	13.5

Scope of delivery

- Integrated side seam guided vertical awning TERRA SIDE
- Wired motor with ONYX control system
- Standard colors for the frames according to HELLA Color worlds
- Standard cover: Glass fibre fabrics SATINÉ 5500

Supplementary equipment

- Versatile mounting options and therefore also suitable for direct mounting on loggias, balconies or on existing wall openings
- Wide range of glass fibre fabrics and PVC-coated and PVC-free polyester fabrics.
- Simple operation by means of radio hand-held radio transmitter and the ONYX control system specially developed for sun shading products

Benefits of the product

- Heat protection
- Protection against the cold
- Glare protection
- Sight screen
- Protection from UV radiation
- Wind protection
- Rain shelter
- Patented live feedback on the position and movement of the shading element via the ONYX app

KG 115 / KG 130

View

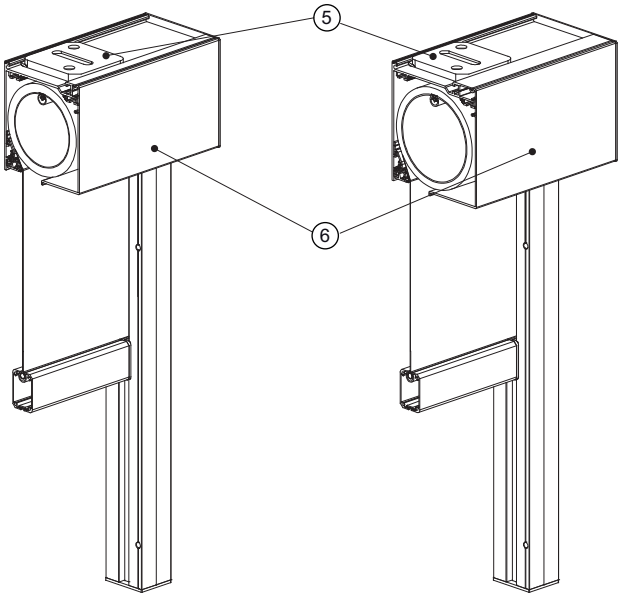

Vertical section

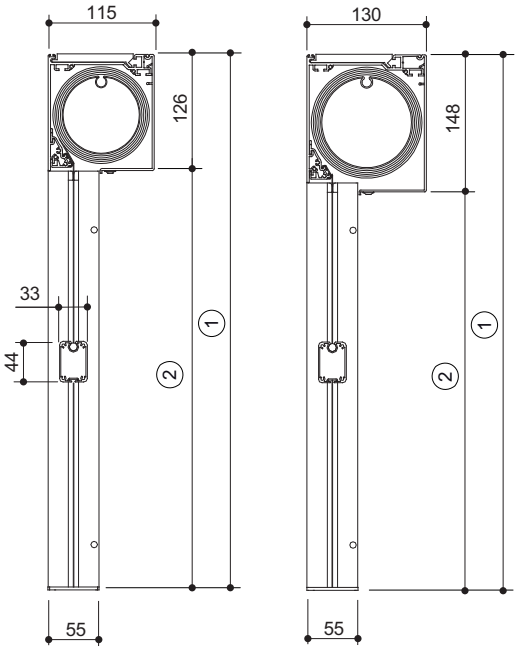

Position crank handle drive

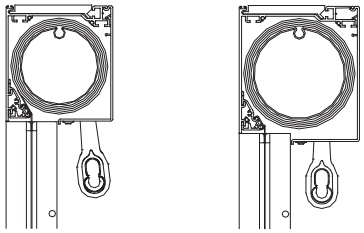

Installation laterally

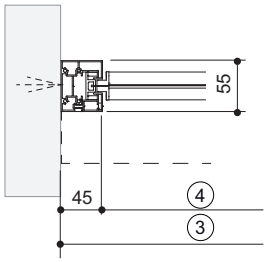

Installation from the front

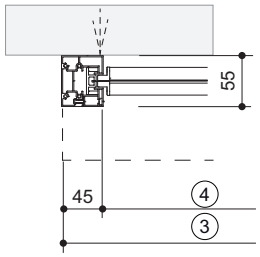

Detail TERRA SIDE mounted on SINTESI

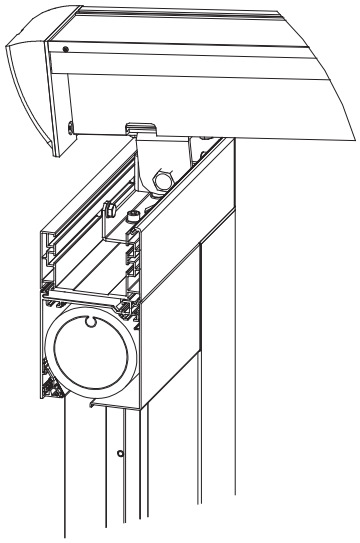

Ceiling bracket

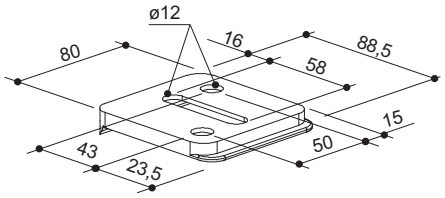

Art. no.: **08060509**

Legend

① Complete height
② Clear height
③ Complete width
④ Clear width
⑤ Ceiling bracket (only included in the delivery, if a lateral installation is foreseen)
⑥ Inspection cover

TERRA SIDE

SCREEN SATINÉ 5500

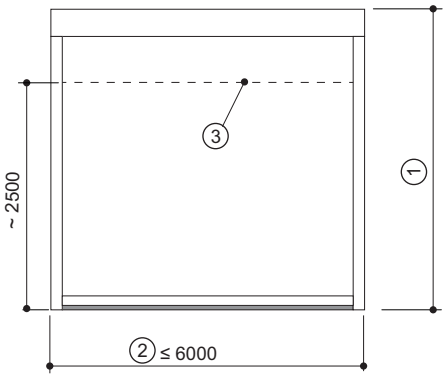

Twilight Comfort

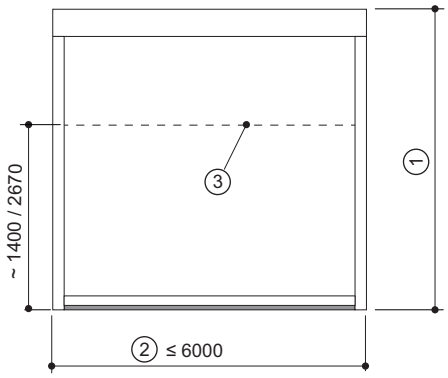

SOLTIS 86/88/92

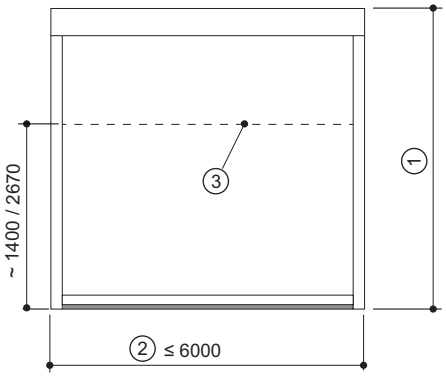

SOLTIS Proof W96

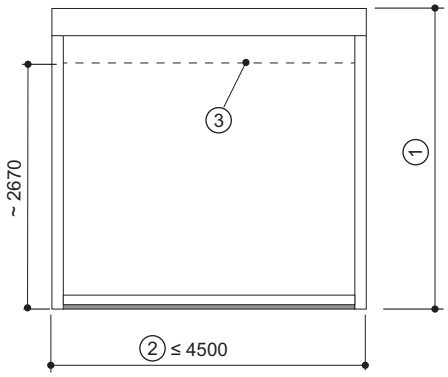

Legend

① Complete height
② Complete width
③ Horizontal weld seam

A horizonal heat sealing cannot be excluded when using a ready produced cover (depending on the material). The web widths can be found in the collection folders.

Visual phenomenons of these covers:

- Waves and wrinkels cannot be completely avoided with side seam guided units and are no reason for complaints.
- These arise at the crossing to the zipper. This can occur, because cover and zipper lie on top of each other and cover different paths during winding. As a result of this, the cover is folded several times over the circumference on the edge during winding. This becomes visible as wrinkle or wave.
- These appearances are intensified by the effects of the weather.
- This issue occurs mostly when using inflexible fabrics such as SOLTIS.

Detection of obstacles

Obstacle detection in **down direction**:

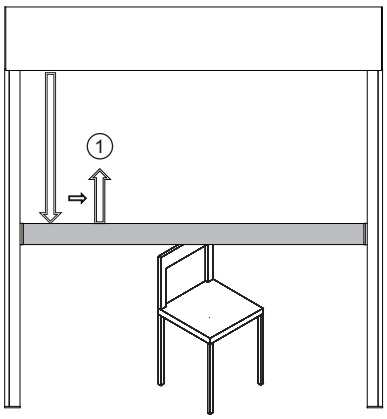

Operating principles with ONYX

- System moves downwards
- Obstacle
- Unit stops and moves back by approx. 10 cm (relieve motion)
- Automatic repeated moving downwards
- Moving to the upper end position if once again an obstacle is detected

Notes:

- The obstacle detection is active during the complete lowering motion, but not in the area of the end position (smooth run at the top and at the bottom)

Operating principles with Somfy io

- System moves downwards
- Obstacle
- Unit stops and moves back by approx. 10 cm (relieve motion)
- Unit remains in this position

Notes:

- The obstacle detection is active during the entire downward movement.
- If the lower end position is set too low, it is treated like an obstacle.

Obstacle detection in the **up-direction**:

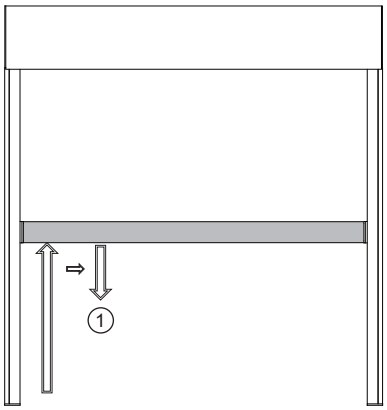

Operating principles with ONYX and Somfy io

- Unit moves up
- Obstacle
- Unit stops and takes the load off
- Unit remains in this position

Notes:

- A direct Up command is not admissible after that.
- The obstacle detection is active during the entire upward movement.

Legend

① STOP

TERRA SIDE

Substrate with incline

The front rail of the lateral shading element always closes **horizontally**.
Slight irregularities can be levelled out via the large-dimensioned sealing profile in the front rail (for VENTUR SIDE M). If a terrace has a floor gradient, an open gap at the ground occurs (see illustration).

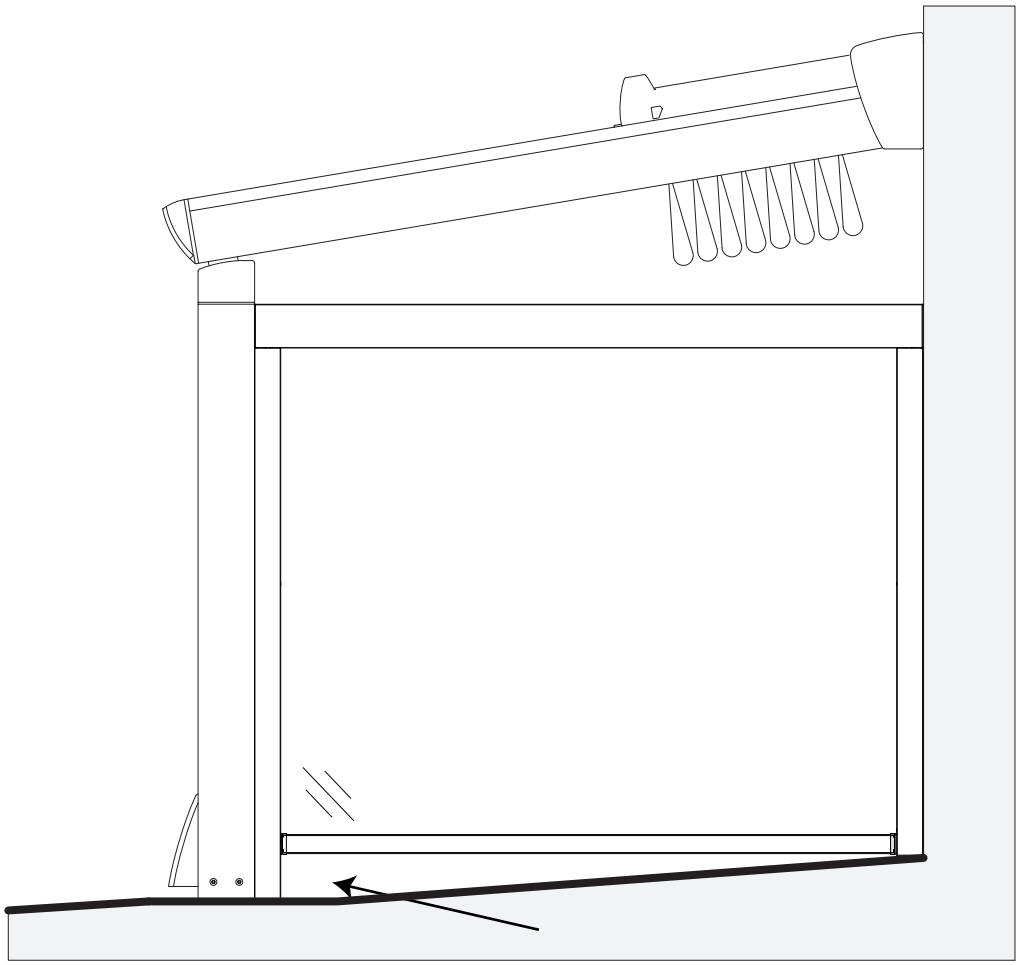

SLAT ROOFS

VENTUR ONE

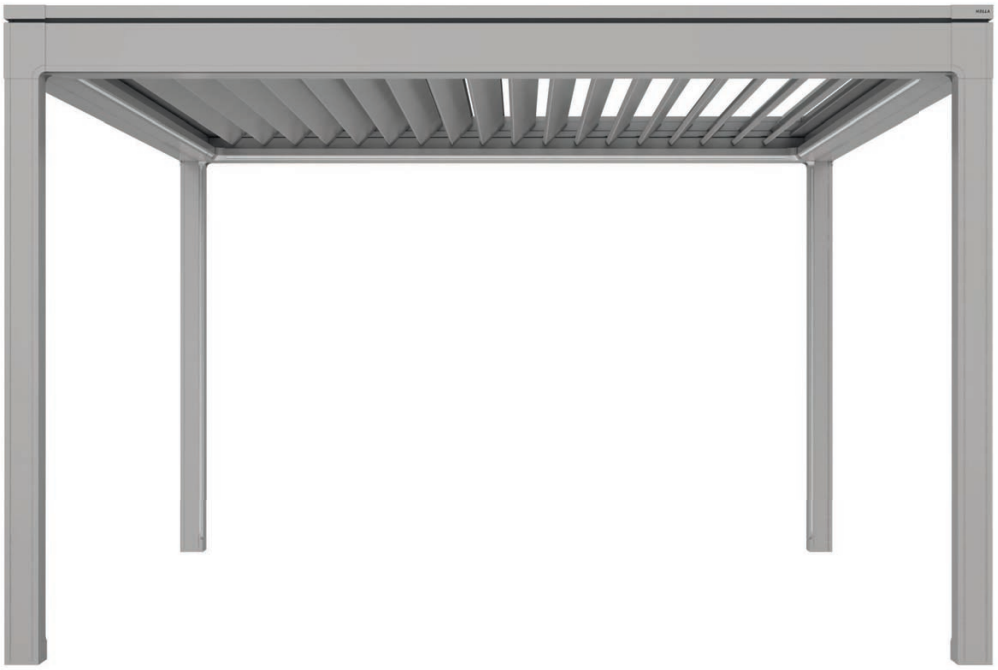



Modern design combined with certified structural engineering



Flexible facings enable frameless integration of shades or sliding glass elements



Telescopic top board for controlled water drainage with slats closed

Limit sizes

Pergola

	VENTUR ONE
Minimum complete width [mm]	2000
Maximum complete width [mm]	4500
Minimum projection [mm]	2000
Maximum projection [mm]	6200
Minimum complete height [mm]	1500
Maximum complete height [mm]	3000

Types of installation

VENTUR ONE free-standing

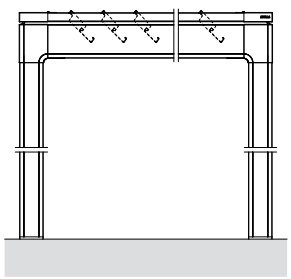

VENTUR ONE wall mounting

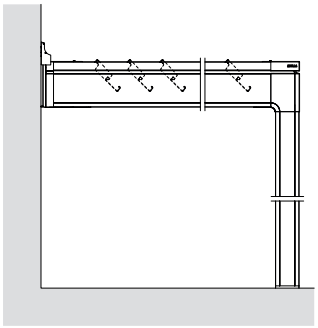

VENTUR ONE free-standing flush with wall

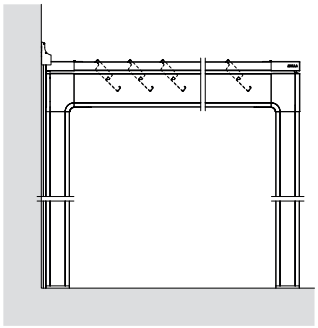

VENTUR FREE

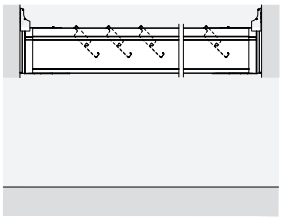

Scope of supply

- Free-standing VENTUR ONE bioclimatic pergola with freely selectable frame color in matt and matt fine texture from the HELLA Color worlds.
- Made to measure down to the millimetre
- Variable modular system
- Slat tilting: 0-135°
- Columns including standard type 1 floor bracket with defined water drainage for connection to site drainage, including sealing accessories
- Motorised telescopic top board providing additional protection from wind and precipitation that could penetrate between roof and frame under the bioclimatic pergola
- Certified system statics
- Fast opening and closing of the slat roof with integral obstacle and blockage detection to protect the structure (only if ONYX controller selected)
- Weather station
- Operation via multichannel radio remote control
- Control via smartphone and the ONYX app (only if ONYX controller selected)
- Free ONYX cloud connection via WLAN or LAN (only if ONYX controller selected)
- Building integration: Amazon Alexa, Google Home, IFTTT, KNX, Loxone (only if ONYX controller selected)
- Sensors for sun, wind and frost

Supplementary equipment

- Additional color selection
- Brackets including wall connections for wall mounting or FREE installation type
- Set-back columns
- Sides can be configured and split for even greater flexibility
- Dimmable LED lighting in warm white or RGBW LED integrated into the structure
- Compatible with integral side-seam guided VENTUR SIDE vertical awnings, can be retrofitted at any time
- Fully integrated sliding glass elements, can be retrofitted at any time
- Modular installation of multiple units next to each other
- Sensors for temperature and for rain and snow detection
- Automation package: Automatic rain function

Benefits of the product

- Heat protection
- Glare protection
- Privacy
- Weather protection
- Rain protection
- Protection against the cold
- Frost protection for structure
- Snow protection
- Daylight regulation
- Protection against UV radiation
- Bioclimatic air circulation
- Architectural RGBW ambient lighting
- Save energy with intelligent sun/temperature-responsive control
- Natural warming in autumn/winter (greenhouse effect) with automatic sun/temperature-responsive control

VENTUR ONE

Type overview

VENTUR ONE free-standing

Basic module

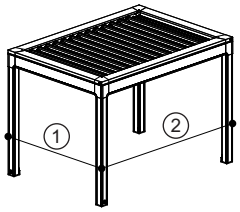

Additional module at the front

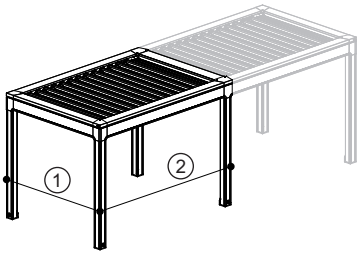

Additional module at side

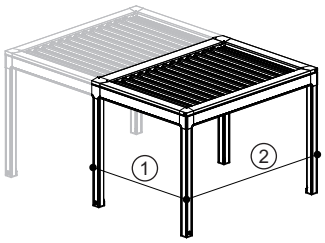

VENTUR ONE wall mounting, slats parallel to wall

Basic module

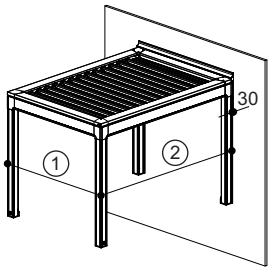

Additional module at the front

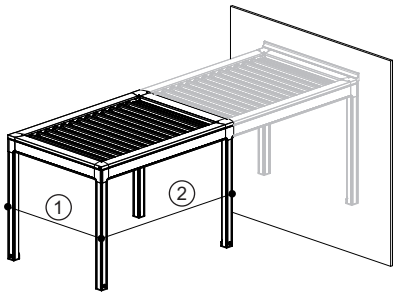

Additional module at side

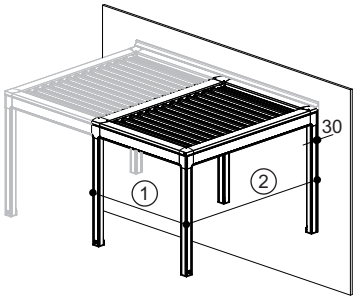

VENTUR ONE wall mounting, slats perpendicular to wall

Basic module

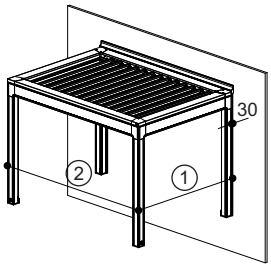

Additional module at side

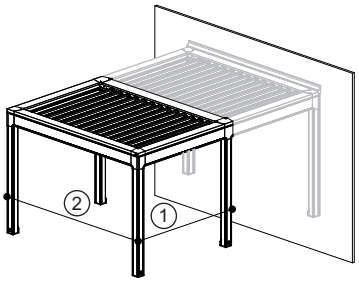

Additional module at the front

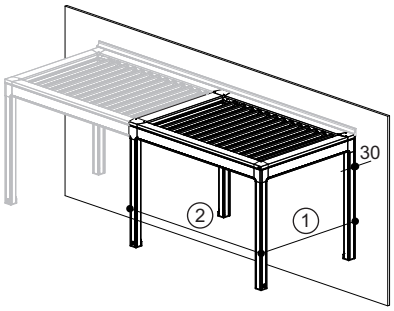

Legend

① Complete width
② Projection

VENTUR ONE installation type FREE, wall mounting, slats parallel to wall

Basic module

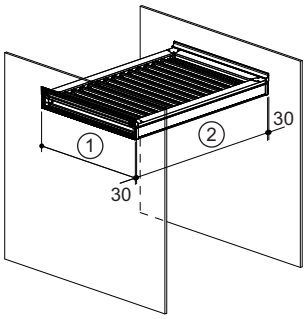

Additional module at side

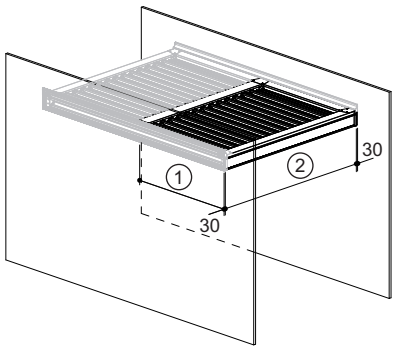

VENTUR ONE installation type FREE, wall mounting, slats perpendicular to wall

Basic module

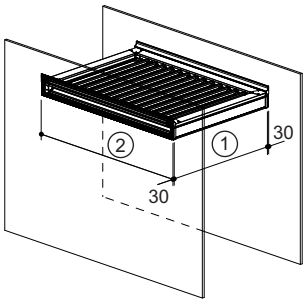

Additional module at the front

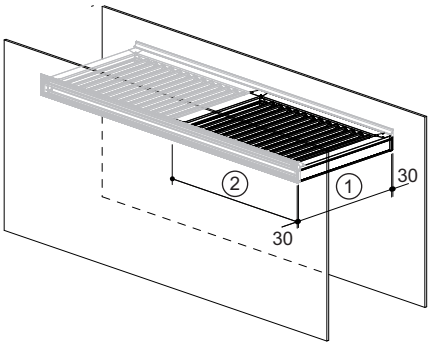

Legend

① Complete width
② Projection

VENTUR ONE

General

Watertightness

- The slat roof must always be installed in accordance with the installation instructions to ensure it sheds water as intended. Damage caused by precipitation as a result of improper installation is not covered by the general warranty. The appearance of condensation on the underside of the slats is not grounds for complaint.
- Facings and cladding units that are not applied to the slat roof by HELLA and do not form part of HELLA's scope of supply may impair the product's ability to shed water. HELLA will not provide any warranty in such cases.
- The slat roof is an outdoor sun protection system and is not intended to be equivalent to a thermally enclosed watertight and wind-proof conservatory or cold roof. Consequently, furnishings, floor etc. must be suitable for the outdoor use.
- Drops may occur at the frame and the columns. If you are not sure, if this drop formation is typical with this product or not, please contact the manufacturer. He can assess, if this is a damage/mistake.
- Extreme and extraordinary weather conditions as well as installation and design can have an (unpredictable) influence on the watertightness.
- When the slats are closed, the integrated drainage system can withstand moderate rainfall events according to standard DIN EN 13561. Perfect water drainage cannot be guaranteed in exceptional extreme weather events.
  Rain gutters can overflow or splash over in such circumstances. Water may be drawn inside through slat end caps in high winds.

Rainwater in the slats

When the slats are closed, the system is rainproof.

In the event of strong winds and the supply of large amounts of water, it cannot be ruled out that water will be forced into the interior of the unit through the end caps of the slats.

During a rainfall, water collects inside the slats. By manually raising the slats for a short time, these water quantities can be drained off in a controlled manner after a rain event before the system is used.

Building regulations

Building regulations vary from country to country and also in some cases from area to area within a country. Specific aspects that may be regulated include the circumstances in which planned construction work requires official approval and the formal steps to be completed before work can begin. It will be necessary in this connection to check whether the VENTUR ONE is covered by official permitting procedures. Responsibility for this check rests exclusively with the owner of the property. Information about whether a planned construction project requires official approval can be obtained from the relevant building supervisory authority.

Ensuring compliance with all applicable regulations, specifically including rules on spacing/clearances and requirements defined in official development plans, is the responsibility of the property owner alone and not of HELLA. The checks necessary to establish whether other official permits are required are likewise not the responsibility of HELLA. Any costs incurred for permitting processes and necessary preparatory work at the installation site (laying foundations etc.) will be borne by the property owner and must be factored in accordingly.

Extensions provided by the client

- The structure of the slat roof is not designed to support heavy loads. Additional loads mounted by the client (horizontal or vertical) are not allowed. Danger to life due to danger of collapsing of the unit. Retrofitted additions (such as third-party glazing) must independently support all structural loads that they introduce.
- All assembly or design variants other than those specified in the technical documents must be presented separately, verified and confirmed by individual structural analyses.

Installation of the system under building roofs or the like

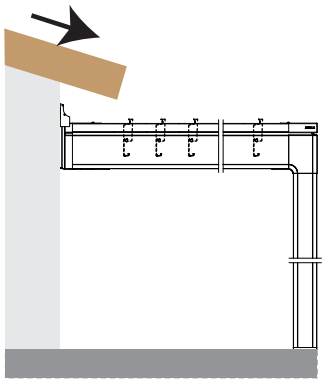

If the system is to be installed under a building roof or similar, it must be ensured that:

- in case of snowfall: the system is protected from avalanches on the roof
- in the event of rain: the rainwater is drained off from the building (house roof etc.) via its own rain gutters

The pergola cannot withstand these loads.



Underground structures may in some cases be exposed to significantly higher loads if the maximum snow load limit is exceeded.

Danger due to collapse of the foundation and the pergola.

Seismic strength

Before the installation of the bioclimatic pergola, the client and / or owner has to check the foundations and the chosen anchoring points for their seismic strength.

Noise generation

Environmental influences (frost, heat, rain, snow) lead to linear expansion in the aluminium profiles of the system.
Particularly in the case of moving aluminium profiles (slats, push rod), driving noises cannot be ruled out.
Noises that occur (e.g. in systems with high running cycles or with advancing age) can be eliminated by targeted lubrication.

Winter operation

By virtue of its design, the bioclimatic pergola structure has a verified resistance to snow load (in the absence of wind) that depends on the size of the pergola concerned.
Despite this high resistance to snow loads, it is recommended that the slats be moved into the vertical position (90°) in the event of snowfall to delay snow accumulation. The structure is not designed to manage snow loads in combination with elevated wind speeds. Accumulations of snow or ice can lead to the unit being damaged.
The unit may only be operated if it can be assured that it is free from snow and ice. The vertical shading system (VENTUR SIDE) must be moved into the upper end position and removed from service.



Note:
All the snow must be removed from the system every time snow falls. The snow load must not exceed the figures set out in Table A above or, in the case of the version with sliding glass elements, the figures in Table D above. The weight of snow can change rapidly as described below. Danger to life due to overloading of the unit leading to collapse.
Note: If accumulations of snow are left on the roof and it then rains, the snow load can **increase very rapidly**.
When using these guide values, it must also be ensured that the anchors in the wall and ground are also able to cope with these loads.

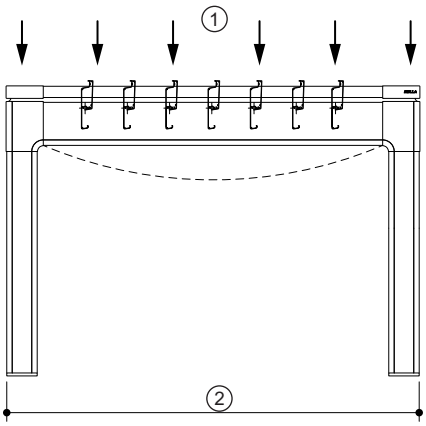

Legend

① Weight
② Projection

The higher the water content in the snow, the heavier the snow is. Snow weighs between approx. 30 and 900 kg per m³, depending on moisture content and density. This is because different aggregation states of snow have different densities and, therefore, different weights. Powder snow is lighter than wet snow and wet snow is lighter than ice. Values to estimate the snow load as per the following table:

Types of snow	Weight kg/m³
Dry, smooth snow	30-50
Packed fresh snow	50-100
Heavily packed fresh snow	100-200
Dry old snow	200-400
Wet old snow	300-500
Multi-year firn	500-800
Ice	800-900

Type testing - system statics

The following maximum wind and snow load limits have been verified in a system static and confirmed by means of a certified type test. The designs and limit dimensions shown must be observed.
If the limit values are exceeded, if the design of the system is changed or if the system is used for other purposes, the type statics lose their validity without exception.

VENTUR ONE

Recommended maximum wind limits and snow loads after type testing

The type approval (system statics) does not release the operator from the obligation to obtain a permit, taking into account the respective country-specific regulations.
The scope of goods and services does not include any project-specific confirmation by a civil engineer or design review engineer that may be required by the local building authorities, and any such confirmation will need to be arranged separately by the customer.

The type approval (system statics) does not release the operator from the obligation to obtain a permit, taking into account the respective country-specific regulations.
The scope of goods and services does not include any project-specific confirmation by a civil engineer or design review engineer that may be required by the local building authorities and any such confirmation will need to be arranged separately by the customer.
The loads specified relate just to the product itself.
Lifting and horizontal loads must be accommodated by appropriate foundations, substructures and fixing materials provided by the client. The foundations and anchors must be planned in accordance with the object-specific requirements, verified against structural engineering criteria and realised to a professional standard.

Width/sloping projection in m
Snow load in ^{2} - **conversion example:** 1 kN/m^2 ~ 100 kg/m^2

Table A: Snow load with wind according to Table B and snow including safety margins per standard

Width/ projection	6.5	6.0	5.5	5.0	4.5	4.0	3.5	3.0	2.5	2.0
4.5	1.13	1.25	1.36	1.50	1.67	1.88	2.14	2.50	2.82	2.82
4.0	1.35	1.50	1.64	1.80	2.00	2.25	2.57	3.00	3.60	3.68
3.5	1.58	1.75	1.91	2.10	2.33	2.63	3.00	3.50	4.20	5.00
3.0	1.80	2.00	2.18	2.40	2.67	3.00	3.43	4.00	4.80	5.00
2.5	2.03	2.25	2.45	2.70	3.00	3.38	3.86	4.50	5.00	5.00
2.0	2.25	2.50	2.73	3.00	3.33	3.75	4.29	5.00	5.00	5.00

Table B: Wind table in km/h

Width/ projection	6.5	6.0	5.5	5.0	4.5	4.0	3.5	3.0	2.5	2.0
4.5	130	137	137	137	137	137	137	137	137	137
4.0	130	137	137	137	137	137	137	137	137	137
3.5	130	137	137	137	137	137	137	137	137	137
3.0	130	137	137	137	137	137	137	137	137	137
2.5	130	137	137	137	137	137	137	137	137	137
2.0	130	137	137	137	137	137	137	137	137	137

Table C: Snow load without wind including safety margins per standard in kN/m²

Width/ projection	6.5	6.0	5.5	5.0	4.5	4.0	3.5	3.0	2.5	2.0
4.5	1.45	1.60	1.75	1.92	2.13	2.40	2.74	2.82	2.82	2.82
4.0	1.81	2.00	2.18	2.40	2.67	3.00	3.43	3.68	3.68	3.68
3.5	2.18	2.40	2.62	2.88	3.20	3.60	4.11	4.80	5.00	5.00
3.0	2.54	2.80	3.05	3.36	3.73	4.20	4.80	5.00	5.00	5.00
2.5	2.90	3.20	3.49	3.84	4.27	4.80	5.00	5.00	5.00	5.00
2.0	3.26	3.60	3.93	4.32	4.80	5.00	5.00	5.00	5.00	5.00

Table D: Snow load with sliding glass elements in use

Width/ projection	6.5	6.0	5.5	5.0	4.5	4.0	3.5	3.0	2.5	2.0
4.5	0.75	1.03	1.46	1.92	2.13	2.40	2.74	2.82	2.82	2.82
4.0	0.85	1.16	1.64	2.40	2.67	3.00	3.43	3.68	3.68	3.68
3.5	0.97	1.33	1.88	2.75	3.20	3.60	4.11	4.80	5.00	5.00
3.0	1.13	1.55	2.19	3.21	3.73	4.20	4.80	5.00	5.00	5.00
2.5	1.36	1.86	2.63	3.84	4.27	4.80	5.00	5.00	5.00	5.00
2.0	1.70	2.32	3.29	4.32	4.80	5.00	5.00	5.00	5.00	5.00

Recommended maximum wind limits and snow loads after type testing

Table E: Wind table in km/h with column setback

Width/ projection	6.5	6.0	5.5	5.0	4.5	4.0	3.5	3.0	2.5	2.0
4.5	120	126	137	137	137	137	137	137	137	137
4.0	120	126	137	137	137	137	137	137	137	137
3.5	120	126	137	137	137	137	137	137	137	137
3.0	120	126	137	137	137	137	137	137	137	137
2.5	120	126	137	137	137	137	137	137	137	137
2.0	120	126	137	137	137	137	137	137	137	137

Table F: Snow load without wind including safety margins per standard in kN/m² with column setback

Width/ setback	1.50	1.25	1.00	0.75	0.50	0.25
4.5	1.60	2.30	2.82	2.82	2.82	2.82
4.0	2.00	2.88	3.68	3.68	3.68	3.68
3.5	2.40	3.46	5.00	4.80	5.00	5.00
3.0	2.80	4.03	5.00	5.00	5.00	5.00
2.5	3.20	4.61	5.00	5.00	5.00	5.00
2.0	3.60	5.00	5.00	5.00	5.00	5.00

VENTUR SIDE (horizontal shading device)

- Wind resistance: Class 3
- corresponds to wind force 6 on the Beaufort scale (10.8-13.8 m/s)
- VENTUR SIDE must be rolled up when the wind speeds are higher.



The roof slats must be opened at wind speeds higher than those indicated in Table B.
This prevents pressure and suction from building up on the slats.
The textile side closures are to be retracted at wind resistance class 3 (0.11 kN/m² corresponds 14 m/s = 50 km/h).

System information for sliding glass elements (VENTUR GLASS):

- Sound insulation up to Rw=17 dB in accordance with DIN EN ISO 10140-2
- Deflection measurement Class 4 in accordance with DIN EN 12211/12210 (10 mm glass)
- Repeated pressure Class 4 in accordance with DIN EN 12211/12210 (10 mm glass)
- Safety test Class 4 in accordance with DIN EN 12211/12210 (10 mm glass)



In stormy weather, the sliding glass elements at the sides (VENTUR GLASS) must be opened and appropriate measures must be taken to stop them moving and protect them from damage (for example by wedging them in place). The test pressure applied for repeated pressure Class 4 is around 800 Pa, which corresponds in converted form to a wind speed of max. 123 km/h.



These load specifications relate just to the product itself.
The lifting loads must be accommodated by the foundations and fixing materials. The foundations must accordingly be dimensioned and realised to a professional standard.

VENTUR ONE

Weight in kg depending on the width and the sloping projection

The weights in the table describe the actual weight of a free-standing VENTUR ONE (4 columns with a complete height of 3000 mm).

Projection [mm]	Width [mm]								
	2500	2750	3000	3250	3500	3750	4000	4250	4500
1800	330	345	360	375	390	405	420	440	455
2000	340	355	370	385	400	415	435	445	460
2200	355	370	385	400	420	435	455	475	485
2400	370	385	405	420	440	455	475	490	505
2600	385	400	420	440	455	475	495	510	525
2800	400	420	440	460	475	495	515	540	555
3000	415	440	455	475	495	515	540	560	580
3200	440	460	485	505	525	550	570	590	610
3400	450	475	490	515	540	560	580	600	620
3600	465	490	510	535	555	580	600	620	645
3800	485	505	525	555	575	595	620	650	670
4000	495	520	550	570	595	615	645	670	690
4200	510	540	580	590	615	640	665	685	715
4400	525	555	580	605	630	660	685	710	735
4600	550	570	600	630	655	685	705	735	760
4800	555	580	610	630	665	685	715	750	770
5000	570	600	620	655	685	715	735	770	790
5200	590	610	645	675	705	725	760	790	820
5400	600	630	665	695	715	750	780	810	840
5600	620	650	685	705	735	770	800	830	865
5800	630	665	695	725	760	790	820	855	885
6000	650	685	715	750	780	810	840	875	905
6200	665	705	735	770	800	830	865	895	925

The weight reduction for each side that has an additional module connected is -25kg.

Slat tilting

Slat adjustment:
The adjustment of the slats depends on the sun position at the time of use.

Use in the morning	→ Sun is positioned in the East	→ Slat must tilt towards the East
Use at noon / early afternoon	→ Sun is positioned in the South	→ Slat must tilt towards the South
Use late afternoon	→ Sun is positioned in the West	→ Slat must tilt towards the West

Slats closed 0°

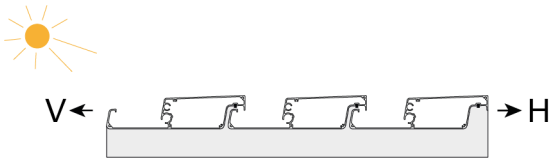

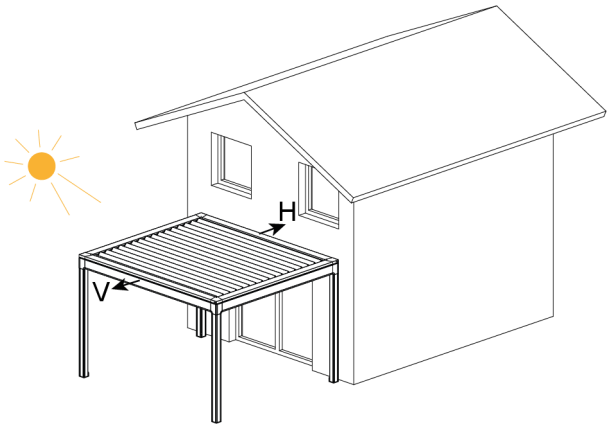

Slats half opened 45°
The slats tilt towards the sun.

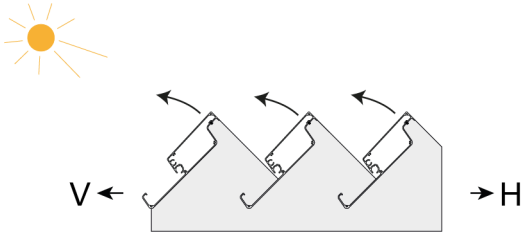

Legend

V Front side
H Rear side

Slats completely open 135°

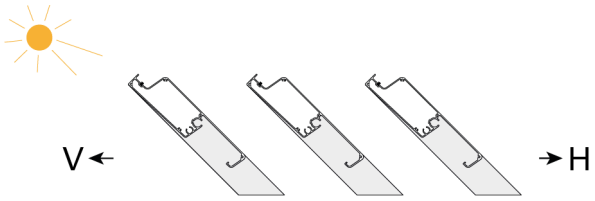

VENTUR ONE

Substructure

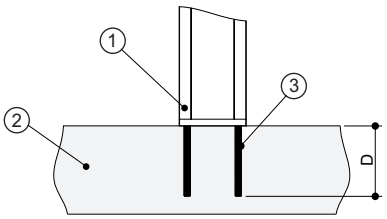

Concrete slab

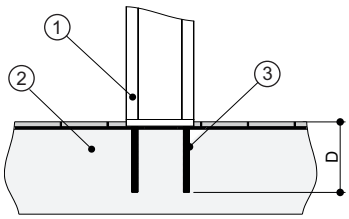

Concrete surface with tiles

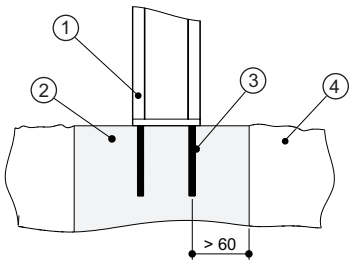

Point foundation

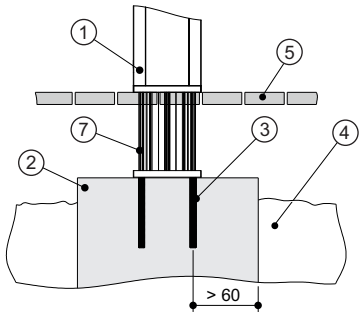

Point foundation with higher terrace floor

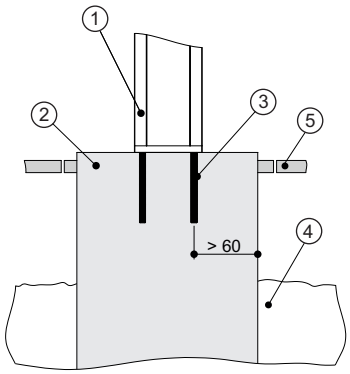

Point foundation with higher terrace floor and special construction

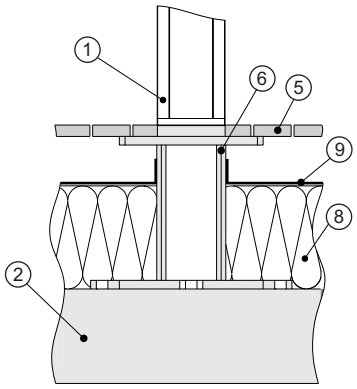

Concrete surface inverted roof structure with higher terrace floor

Do not drill through the sealing layer.

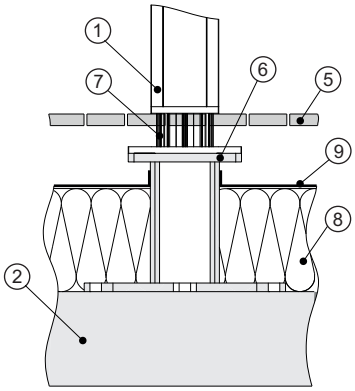

Concrete surface inverted roof structure with lower terrace floor

Do not drill through the sealing layer.

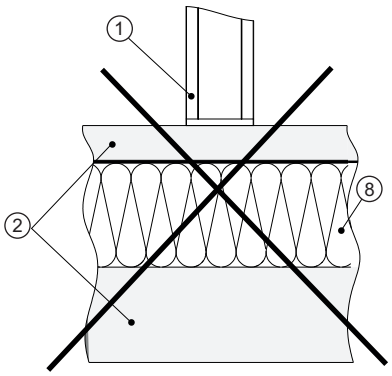

Concrete ceiling with floor screed - not suitable

Notes:

- **In general, the water drainage coming from the columns must be included in the planning of the situation on site.**
  All definitions are recommendations. Country-specific building regulations and admittances must always be observed!
- Fastening on wood must be checked. Fixing of the columns directly to the plank floor is not possible.

Legend

①	Column	⑥	Custom design (on request)
②	Concrete	⑦	Column extension
③	Installation set 11 A2 M, installation set 12 A2 M	⑧	Insulation
④	Soil	⑨	Sealing
⑤	Terrace floor	D	Screw installation depth ▪ M12: >120 mm ▪ M14: >185 mm

Foundation recommendation

The lifting forces depend in principle on the dimensions (complete width and overhang) of the unit.
Opening the slats at reduced wind speeds other than as specified in the technical documentation can reduce the lifting forces. The moments to be transferred to the foundation with such a design are as follows: Single unit 6.5 kNm (4.5 kNm)*, coupling column 13.0 kNm (9 kNm)*.
An expert will be able to design the foundation to suit local conditions on this basis. Resultant lifting load factoring in the actual weight of the unit according to the price list. The resultant maximum force in the downwards direction – actual weight + weight of snow – must also be considered.
The key limit value must subsequently also be stored accordingly in the wind sensor controller for the roof slats.

* Values are for ULS safety level with a safety margin, values in brackets apply for units that are open horizontally with no glass elements

Pergola without sliding glass elements

Option 1:

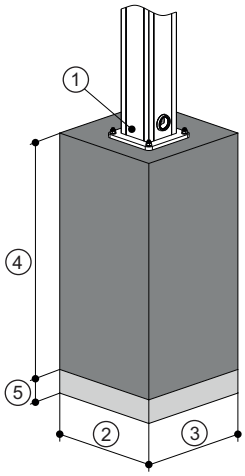

Option 2:

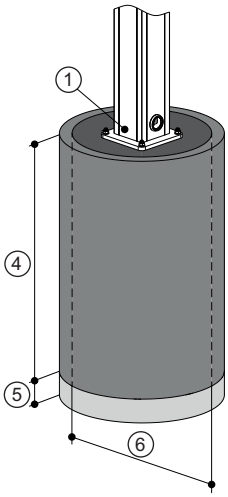

- Bottom edge of the foundation on frost depth
- below the foundation: 15 cm of compressed gravel layer
- Material of the foundation: Concrete C20/25
- Steel: flexural strength BSt 550 transverse strength BSt 550
- Foundation has to be reinforced crosswise
  Foundation: Clamp ø8 mm each 30 cm
  Lengthwise reinforcement 4 x ø10 mm
- Foundation must have a minimum volume of 0.25 m³

Legend

① Column base
② Side length of the foundation at least 500 mm, provided by the client
③ Side length of the foundation at least 500 mm, provided by the client
④ Height of the foundation at least 1000 mm, provided by the client
⑤ Height of the compressed gravel layer on site
⑥ Diameter of the foundation at least 550 mm, provided by the client without formwork

Pergola with sliding glass elements

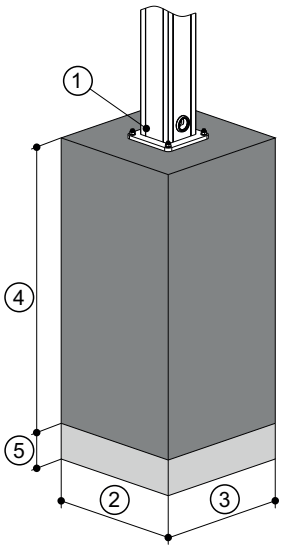

- Bottom edge of the foundation on frost depth
- below the foundation: 15 cm of compressed gravel layer
- Material of the foundation: Concrete C20/25
- Steel: flexural strength BSt 550 transverse strength BSt 550
- Foundation has to be reinforced crosswise
  Foundation: Clamp ø8 mm each 30 cm
  Lengthwise reinforcement 4 x ø10 mm
- Foundation must have a minimum volume of 0.43 m³

Legend

① Column base
② Side length of the foundation at least 600 mm, provided by the client
③ Side length of the foundation at least 600 mm, provided by the client
④ Height of the foundation at least 1200 mm, provided by the client
⑤ Height of the compressed gravel layer on site

Notes:

- All definitions are recommendations.
- For a central column of the VENTUR ONE, this must be determined separately according to structural engineering principles.
- The recommendations are based on non-cohesive good ground.
- Country-specific building regulations and admittances must always be observed!

VENTUR ONE

Taking of measurements

Main dimensions

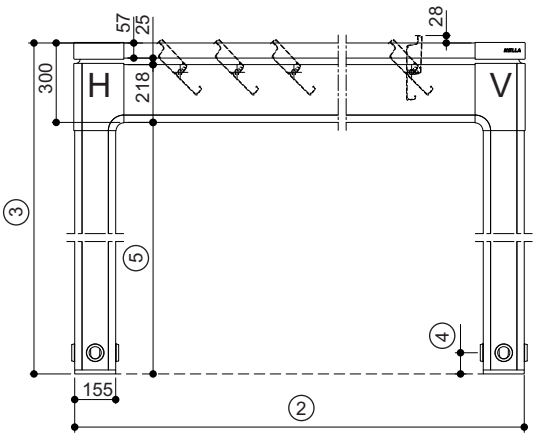

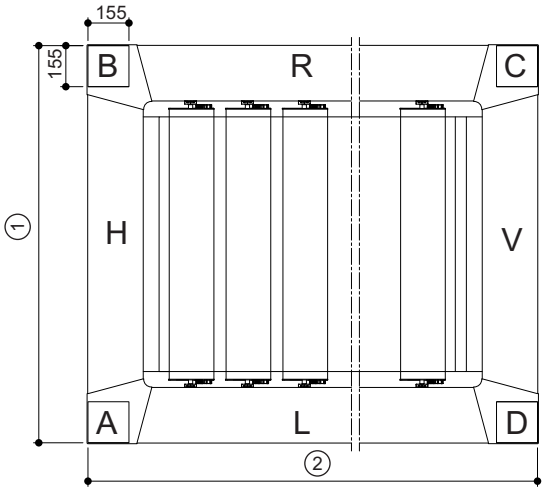

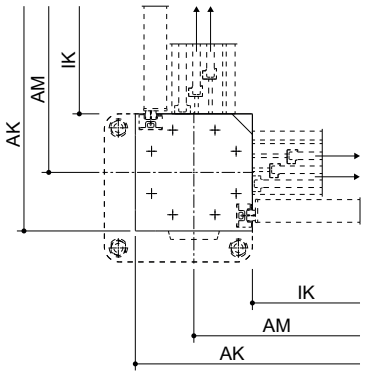

Reference edge columns

The following three options are possible to determine the ordering dimension for complete width and projection.

Legend

AK	Outer edge
AM	Dimension between axes
IK	Inner edge

Free-standing

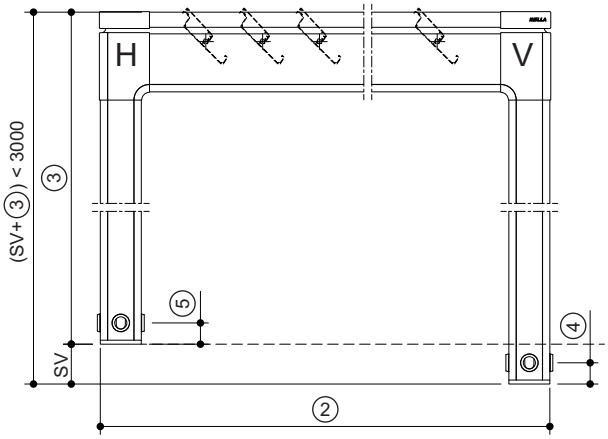

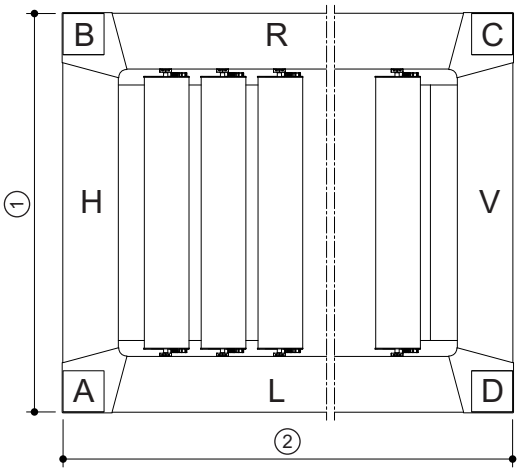

Legend

A, B, C, D	Column A, column B, column C, column D
L	Left side
R	Right side
V	At front
H	at back
SV	Column extension
①	Complete width (outer edge - outer edge)
②	Projection (outer edge - outer edge)
③	Complete height
④	Height of water drain
⑤	Passage height

Taking of measurements

Installation flush with wall

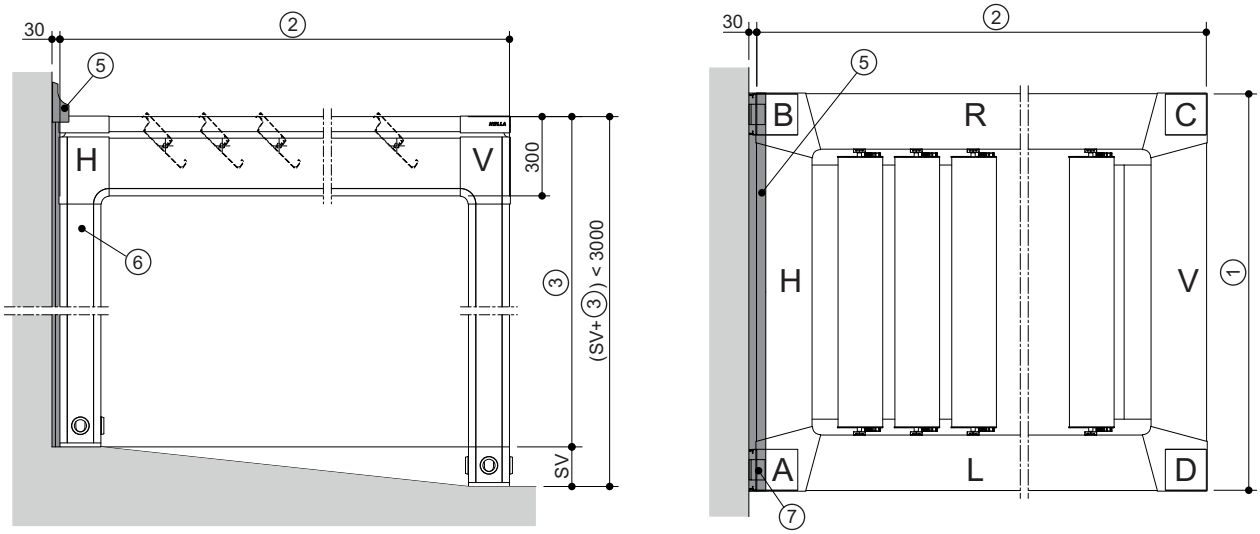

Note:

It is possible to swap around complete width and projection in the case of installation flush with the wall. This changes the orientation of the slats relative to the wall so that they are aligned at 90° to the wall as viewed from above.

Wall mounting

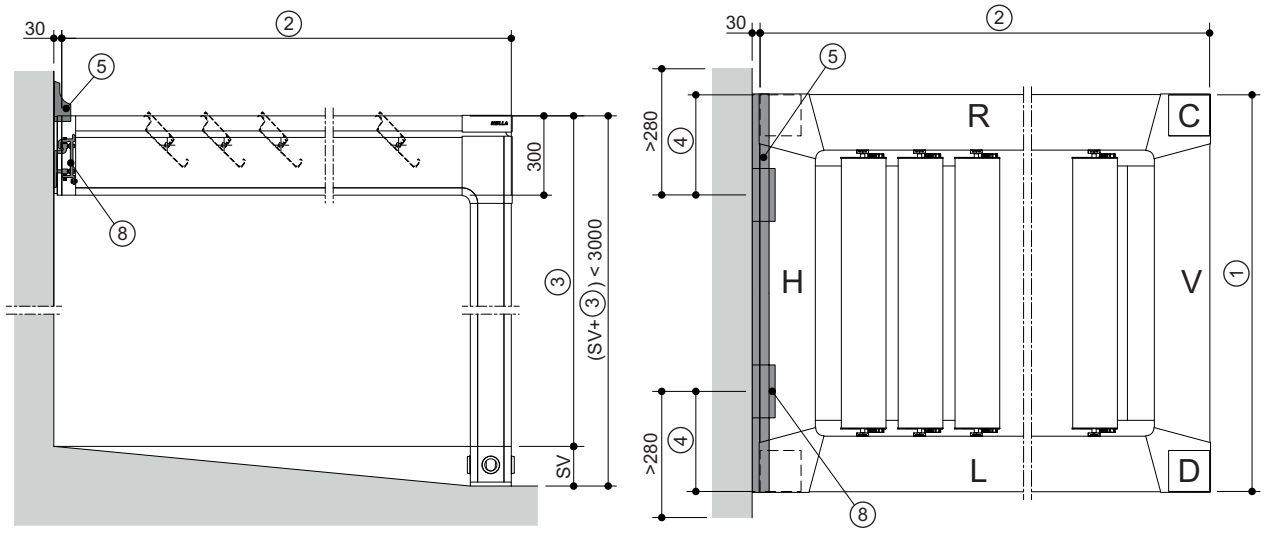

Legend

A, B, C, D	Column A, column B, column C, column D
L	Left side
R	Right side
V	At front
H	at back
SV	Column extension
①	Complete width (outer edge - outer edge)
②	Projection (outer edge - outer edge)
③	Complete height
④	Wall bracket position ▪ front/back: 600-700 mm ▪ left/right: Projection/5 (+/- 100 mm); max. 1200 mm
⑤	Wall connection top board (optional)
⑥	Column flush with wall
⑦	Wall bracket type F for installation flush with wall
⑧	Wall bracket type B for wall mounting

VENTUR ONE

Measurement with different base structures

Inclined floor without base structure

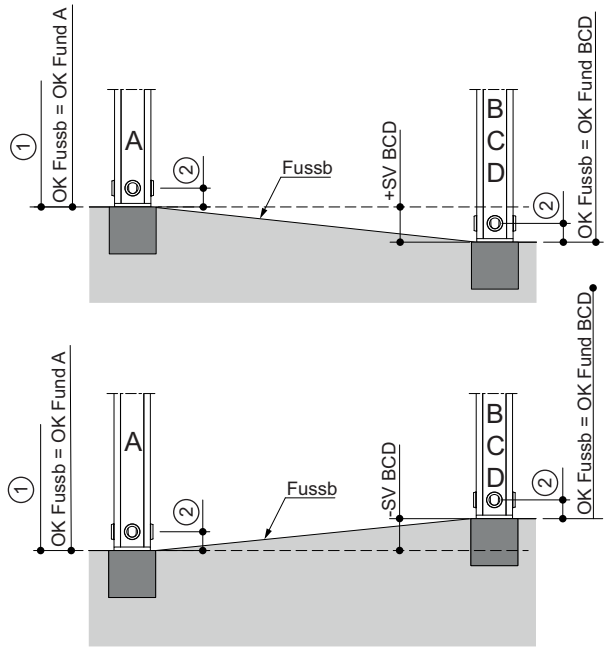

Legend

A, B, C, D	Column A, column B, column C, column D
SV BCD	Column extension B, C or D ("+" or "-")
Flr	Floor
UE flr	Upper edge of floor
UE fndA	Upper edge of foundation A
UE fndBCD	Upper edge of foundation B, C or D
BS A	Base structure column A from 45-500 mm
BS BCD	Base structure column B, C or D from 45-500 mm
①	Complete height
②	Height of water drain ▪ min. 60 mm ▪ max. complete height + column extension - 450 mm

Notes:

- A column extension is possible in principle from 1 to 1200 mm. Negative values (column shortening) are also possible. It must be ensured in this connection that the maximum complete height including the column extension does not exceed 3000 mm.
- Note regarding incline: Observe situation for VENTUR GLASS and VENTUR SIDE in the corresponding chapter.

Floor with base structure, finished floor level

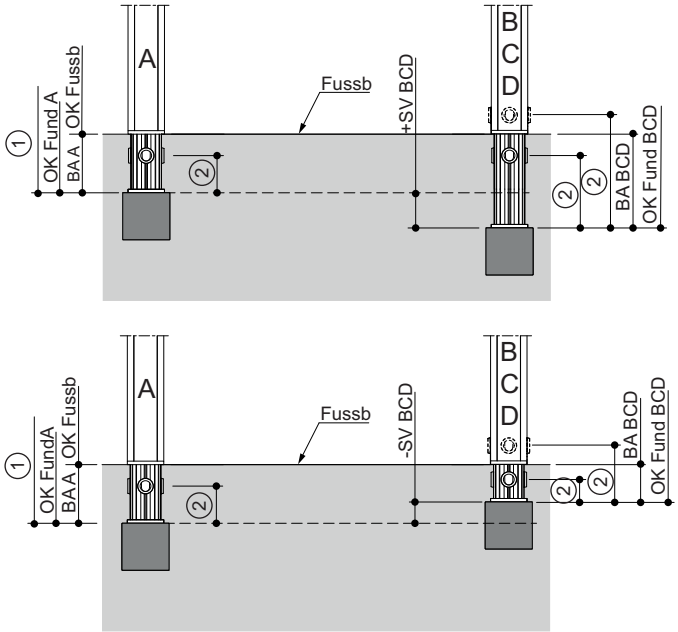

Floor with base structure, finished floor inclined

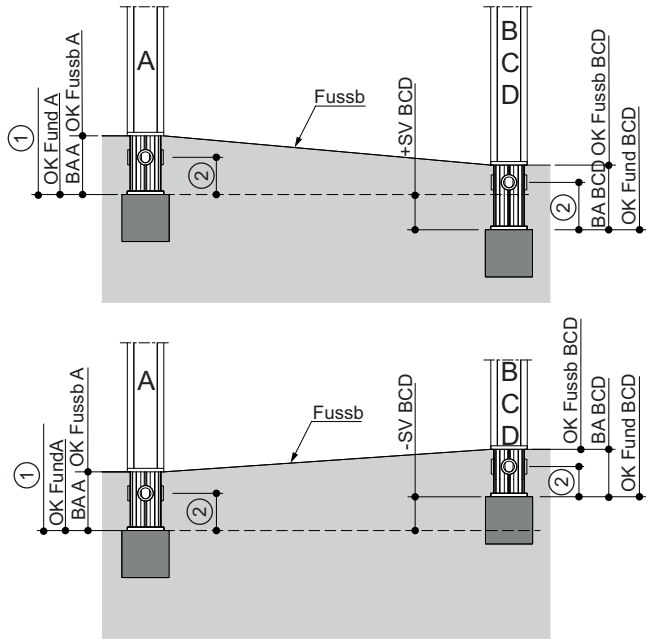

SV BCD	Column extension B, C or D ("+" or "-")
Flr	Floor
UE flr	Upper edge of floor
UE fndA	Upper edge of foundation A
UE fndBCD	Upper edge of foundation B, C or D
BS A	Base structure column A from 45-500 mm
BS BCD	Base structure column B, C or D from 45-500 mm
①	Complete height
②	Height of water drain ▪ min. 60 mm ▪ max. complete height + column extension - 450 mm

Notes:

- A column extension is possible in principle from 1 to 1200 mm. Negative values (column shortening) are also possible. It must be ensured in this connection that the maximum complete height including the column extension does not exceed 3000 mm.
- Note regarding incline: Observe situation for VENTUR GLASS and VENTUR SIDE in the corresponding chapter.

Legend

A, B, C, D	Column A, column B, column C, column D

Column spacing in the event of minor variations in the installation base

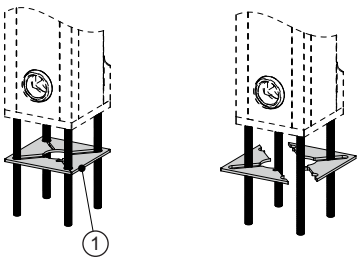

Support plates for base plate type 1

For visible spacing of the column from the installation base. Available in thicknesses of 1 mm, 3 mm and 5 mm.

The support plate can also be retrofitted to columns already installed. The plate is separated at the break points provided and slid in under the base plate from the side.

Legend

①	Support plate

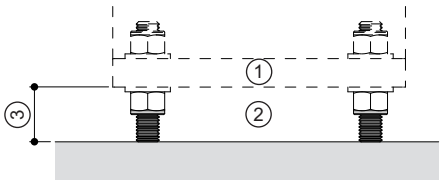

Spacing with nuts/washers

Invisible spacing of the column from the installation base is realised using nuts or washers.

The client is responsible for concealing or covering the spacing gap, for example with cladding or a plank floor.

Legend

①	Base plate type 1-4
②	Example of raised installation with threaded rods
③	Maximum spacing: ▪ Threaded rod M12: 48 mm ▪ Threaded rod M14: 33 mm

VENTUR ONE

Taking of measurements

Installation FREE

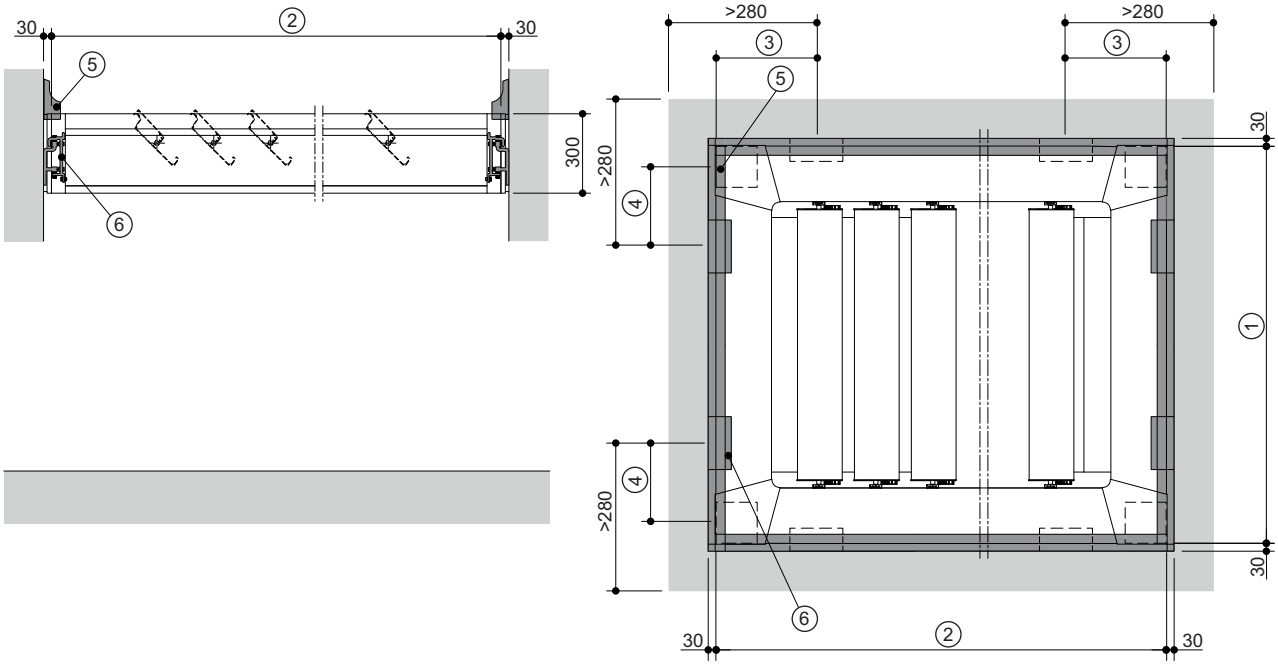

Legend

①	Complete width (outer edge - outer edge)	④	Wall bracket position: 600-700 mm
②	Projection (outer edge - outer edge)	⑤	Wall connection top board (optional)
③	Wall bracket position: Projection/5 (+/- 100 mm); max. 1200 mm	⑥	Wall bracket
		⑦	Corner column

Design options:

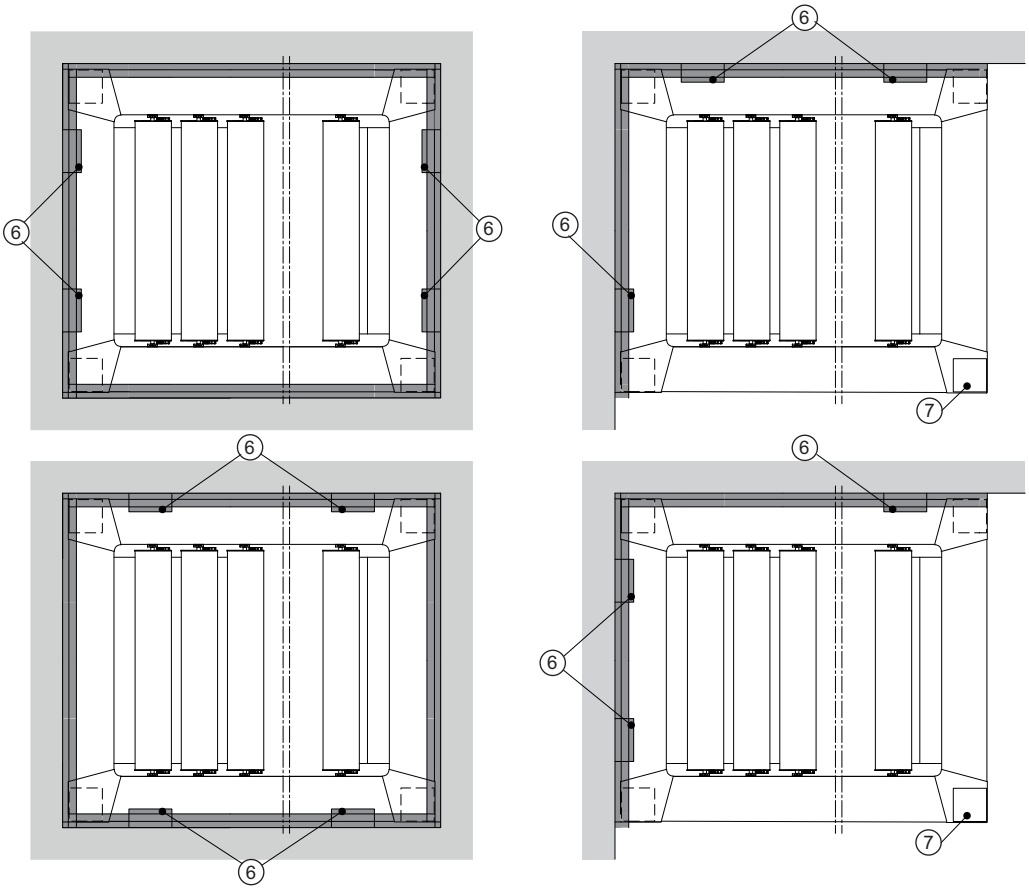

Minimum spacing from existing building structure

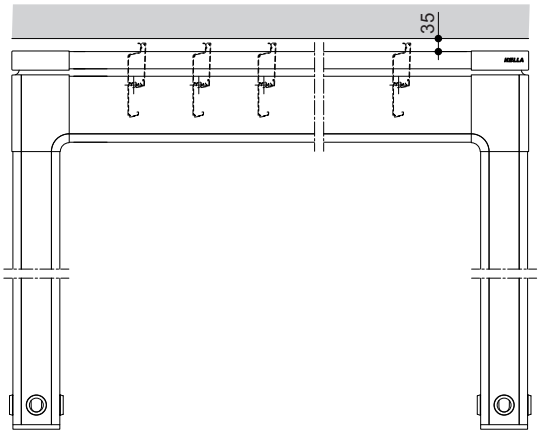

Slats

The slats require 35 mm of clearance above the unit when in the vertical position.

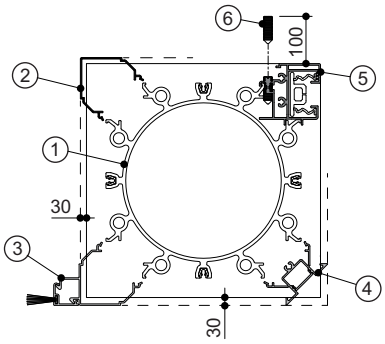

Column facing

There must be sufficient space available to clip on the corner facings and to fit the threaded pin for the VENTUR SIDE guide rail.

Legend

① Column profile
② Column cover profile, outside corner
③ Optional column cover profile with brush for wall connection
④ Column cover profile, inside corner, with end fittings top and bottom and optional lighting
⑤ Optional guide rail SSG with internal guide profile and end fittings top and bottom
⑥ Screw in M5x18 threaded pin so that it is at least flush

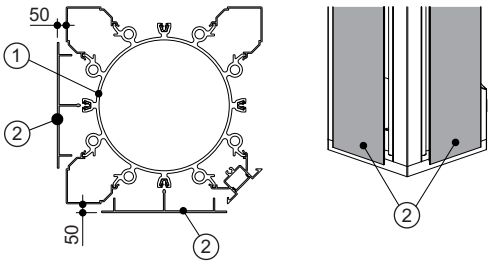

There must be sufficient space available to clip on the column facings.

Legend

① Column profile
② Column facing

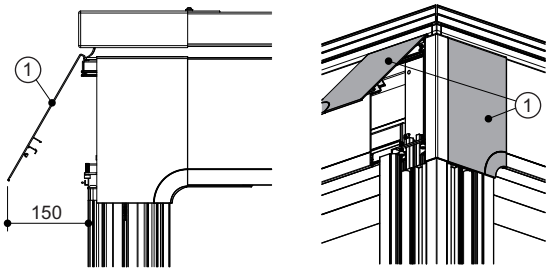

Column cover

There must be sufficient space available hinge the column covers in place and screw them down.

Legend

① Column covers

VENTUR ONE

Minimum spacing from existing building structure

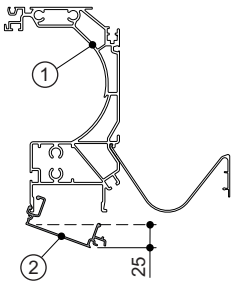

Top board profile, bottom

There must be sufficient space available to clip on the top board profiles.

Legend

① Basic profile
② Top board profile, outside
③ Optional: Top board profile, bottom, with brush for wall connection

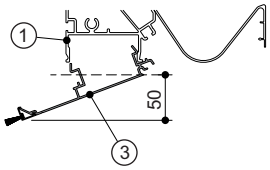

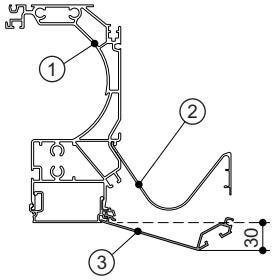

There must be sufficient space available to hinge the rain gutter top board profile in place and clip it on.

Legend

① Basic profile
② Rain gutter
③ Top board profile, rain gutter

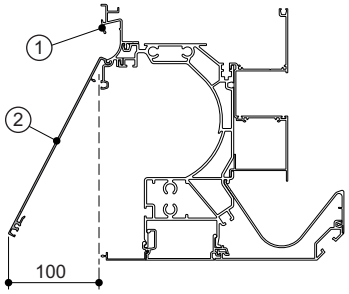

Top board profile, outside

There must be sufficient space available to hinge the outside top board profile in place and clip it on.

Legend

① Adapter profile
② Top board profile, outside

Spacing from overhang

VENTUR ONE - wall mounting

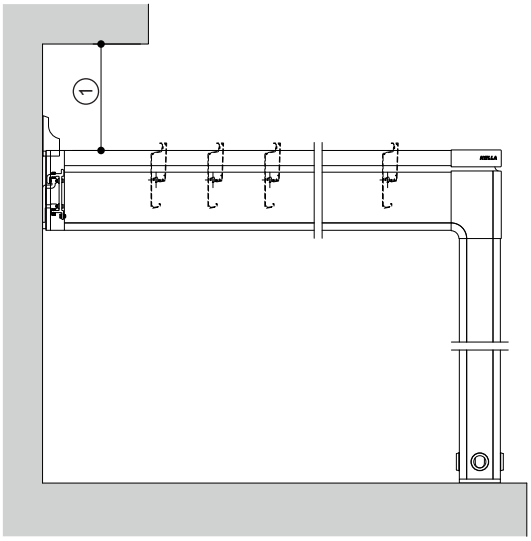

Total price for VENTUR ONE, installation type FREE

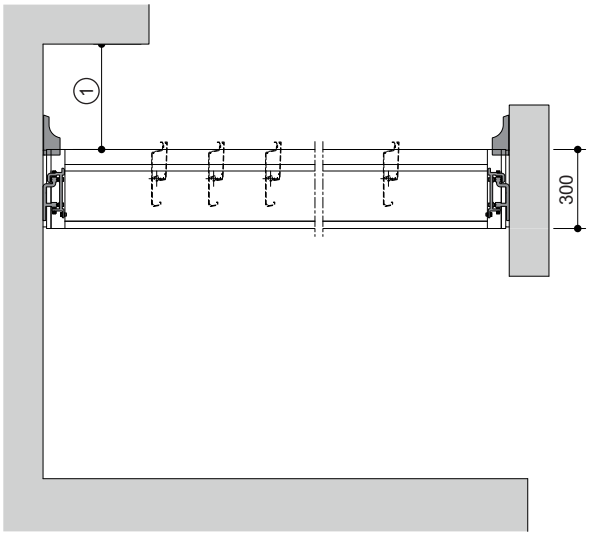

Legend

① VENTUR ONE spacing from overhang

The following spacing is required between the unit and any overhang for installation purposes:

- To hinge the upper top board in place and clip it on and to install the covers: 200 mm
- without wall connection top board: 200 mm
- Recommendation with wall connection top board: 500 mm (because a silicone cartridge is used for sealing)

VENTUR ONE

Drainage system

Direction of the water drainage

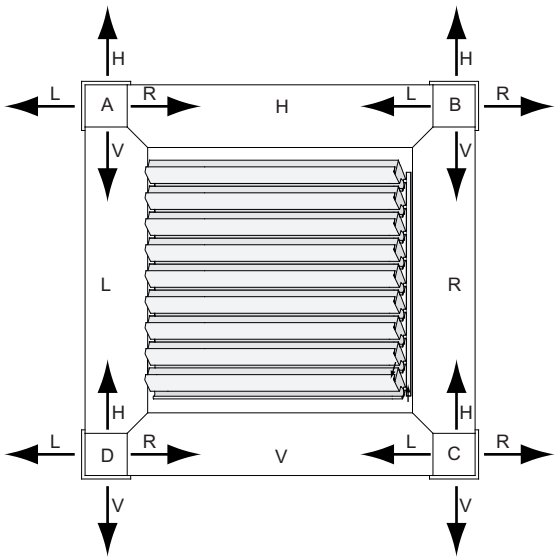

Legend

A, B, C, D	Column A, column B, column C, column D
L	left
R	right
H	at back
V	Front
①	Water drain visible
②	Water drain for discharge pipe
③	Discharge pipe HT50 (not included in scope of supply)
④	Height of water drain ▪ min. 60 mm ▪ max. complete height + column extension - 450 mm

Water drain to the side without base structure – water drain visible

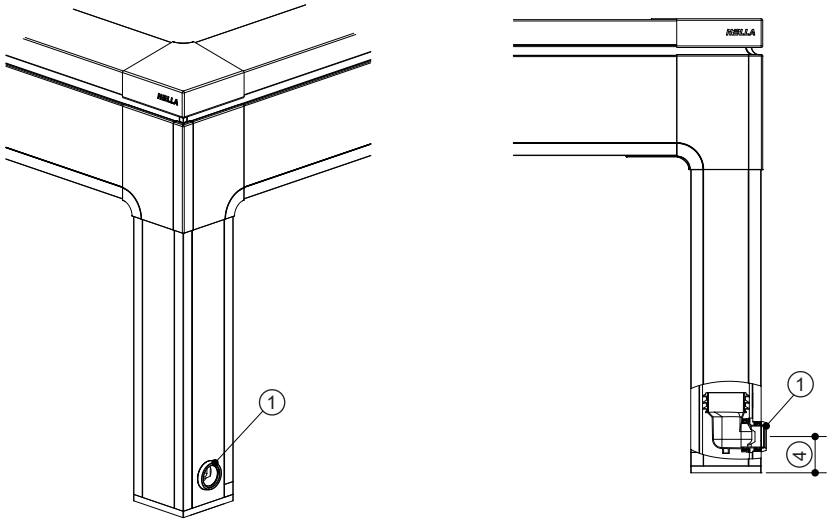

Water drain to the side without base structure – water drain with discharge pipe

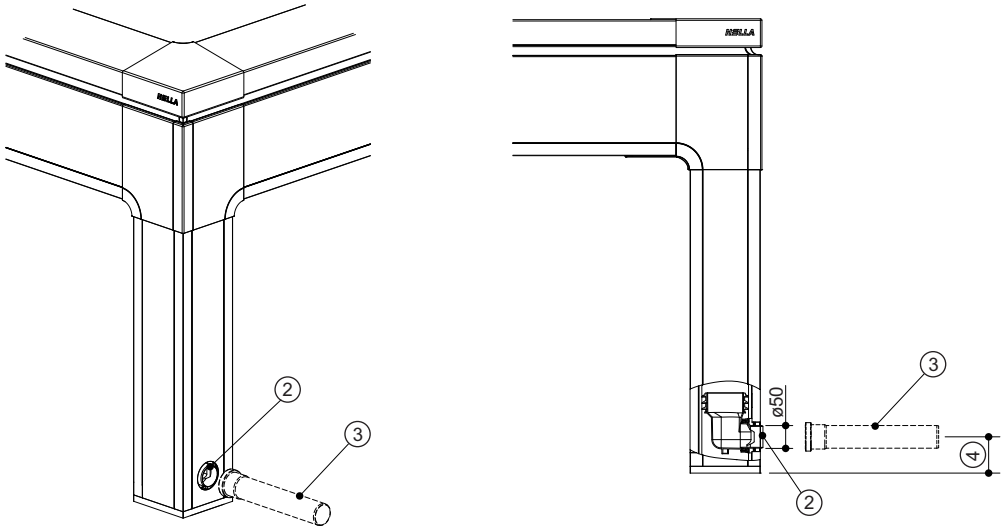

Water drain to the side with base structure

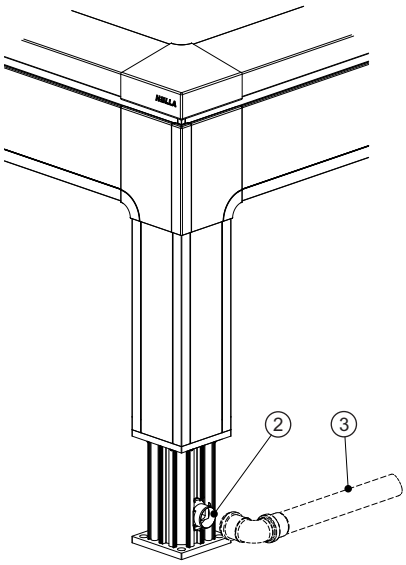

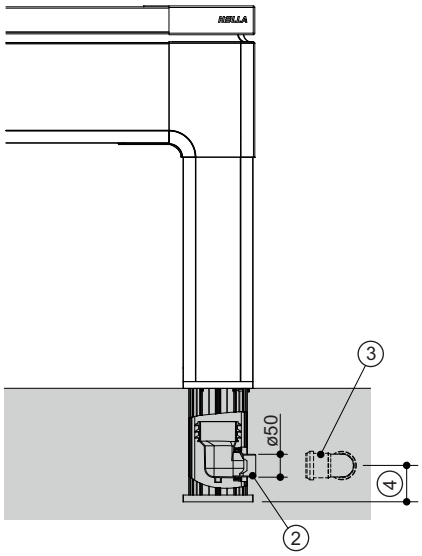

Water drain downwards

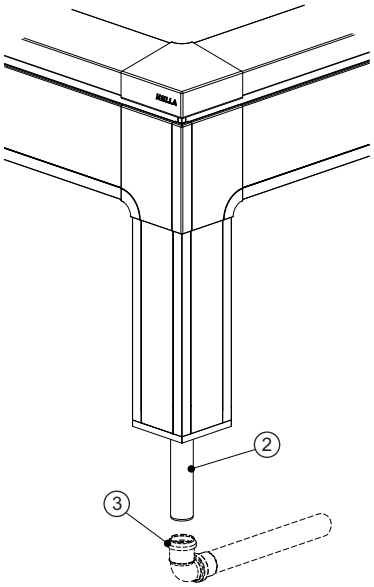

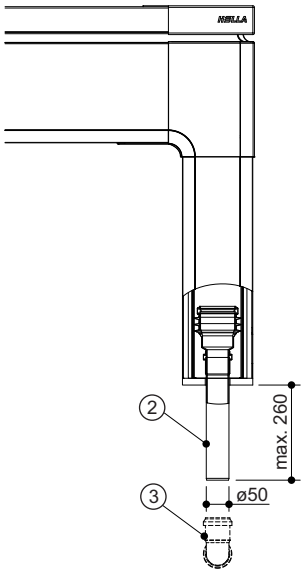

Legend

②	Water drain for discharge pipe
③	Discharge pipe HT50 (not included in scope of supply)
④	Height of water drain ▪ min. 60 mm ▪ max. complete height + column extension - 450 mm

Notes:

- **At least 2 water drains per unit are required!**
  Exception: Installation area (complete width x projection) <=16 m²
- Water drains can be incorporated into all columns including the column housing the power supply.

VENTUR ONE

Drainage system

Water drain in the wall

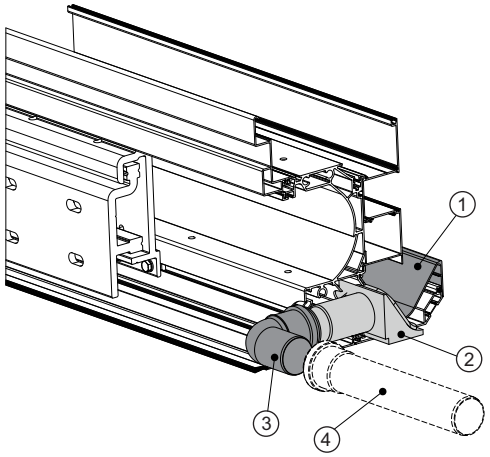

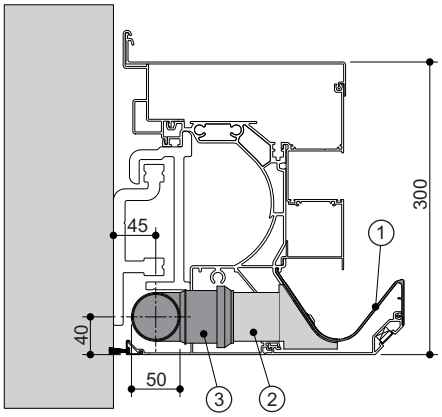

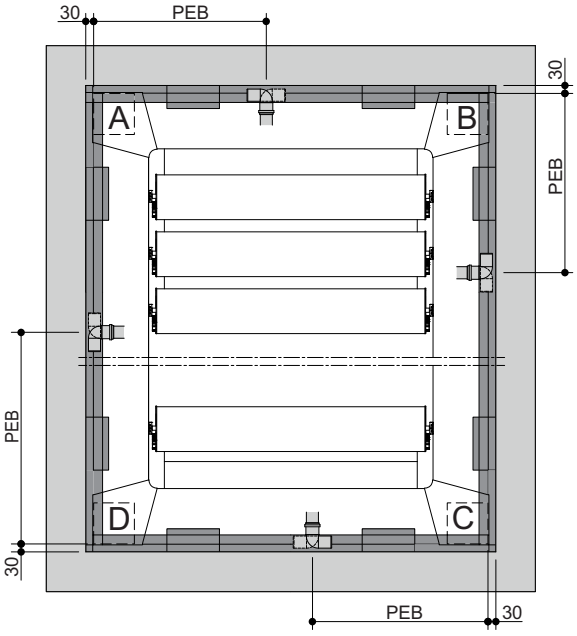

Legend

PEB Position of water drain

① Rain gutter
② Water drain for wall side
③ 90° Pipe elbow
④ Discharge pipe HT50 (not included in scope of supply)

The PEB dimension is given from the outer edge of the column. The thickness of the wall bracket (30 mm) must also be factored in.

Limit values for dimension PEB:

	Position of water drain [mm]	
	min.	max.
Side H, side V	400	FB - 400
Side L, side R	400	AL - 400

Notes:

- **At least 2 water drains per unit are required!**
  Exception: Installation area (complete width x projection) <=16 m²
- Only the water drain in wall alternative is possible with the FREE version.
- Additional water drains in the wall can be ordered. There can be only one water drain per side.

Power supply

The power supply can be led via the columns and via the wall. The length of the cable must be at least 5 m from the floor or wall.

Power supply via the columns

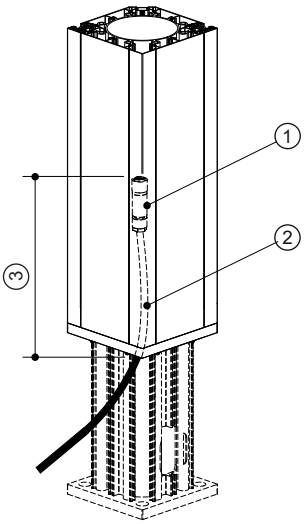

Notes:

- The supply cable can be led via any of the columns, including intermediate columns and columns with column setback.
- The supply cable can be led via the columns irrespective of whether the floor includes a base structure.

The following column types can accommodate a power cable and a water drain together:

- Corner column
- Corner column with column setback
- Corner column flush with wall
- Linking column with column setback
- Linking column flush with wall
- Column for wall outside corner

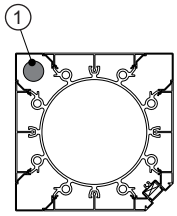

All other column types can only accommodate a power supply in the absence of a water drain. The power supply runs up the centre of the column. This applies to the following column types:

- Intermediate column
- Linking column
- Inside corner column
- Central column

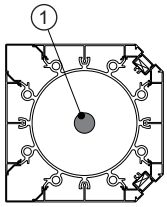

Power supply in columns flush with the wall

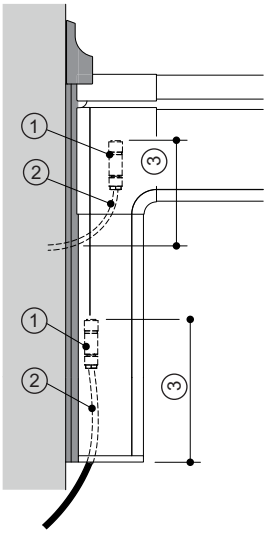

Where columns are flush with the wall, the power supply can run via either the columns or the wall.

Notes:

- Where columns are flush with the wall, the power supply can run via either the columns or the wall.

Power supply via the wall

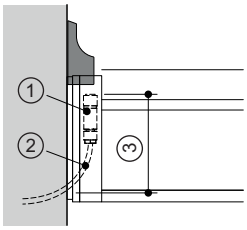

Notes:

- The power supply must run via the wall with the FREE version.

Legend

① Power supply via the columns, optionally 3-pole (3 x 2.5 mm²) or 5-pole (5 x 2.5 mm²).
The 5-pole cable is required if a unit is equipped with power sockets or if other units linked to the unit are supplied via the same cable.

② Plug connector, 3-pole (art. no.: 05250035) or 5-pole (art. no.: 05350033).

③ Required length of cable provided by the client, at least 5 m.

VENTUR ONE

Column setback

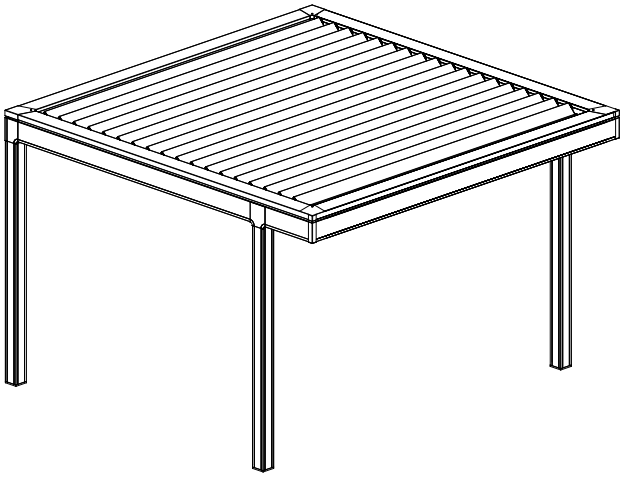

The position of the columns can be adjusted. This makes it straightforward to realise custom solutions such as a canopy roof with the unit.

Notes:

- The distance between the corner columns (supported length) must be at least 1500 mm.
- The corner column can only be set back in the projection direction. This means that setback is only possible on sides H and V.
- It is only possible to set back one column on each side.
- Only units with the same complete width/projection as the basic module can be connected to sides of a unit that have a column set back.
- Column setback is always measured using the unit outer edge measurement.

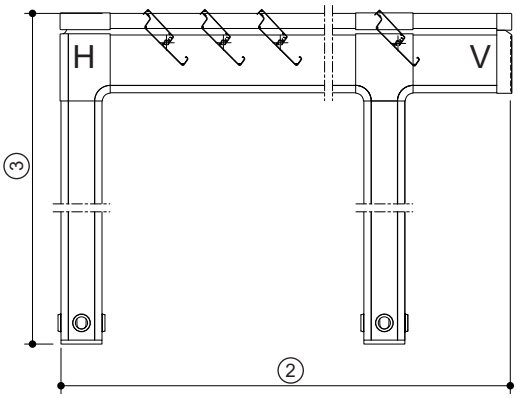

Legend

A, B, C, D	Column A, column B, column C, column D
L	Left side
R	Right side
V	At front
H	at back
TR	Supported length
RÜ	Column setback (min. 500 mm, max. 1500 mm and supported length/1.5)
①	Complete width (outer edge - outer edge)
②	Projection (outer edge - outer edge)
③	Complete height

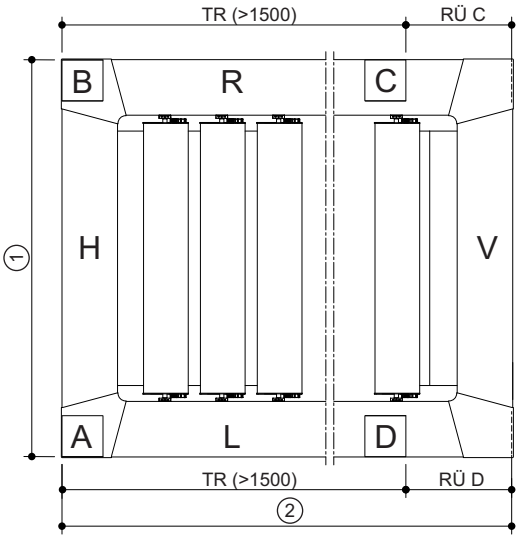

Depiction of the feasible column setback variants

Column setback left and right sides

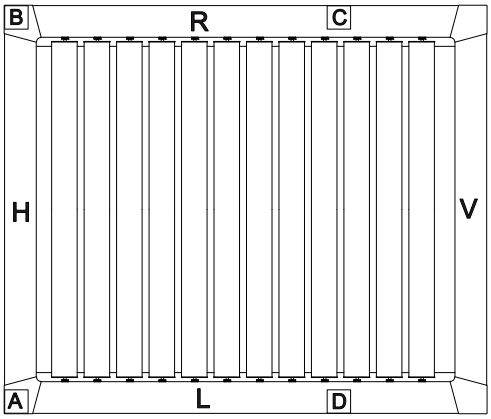

Column setback left side

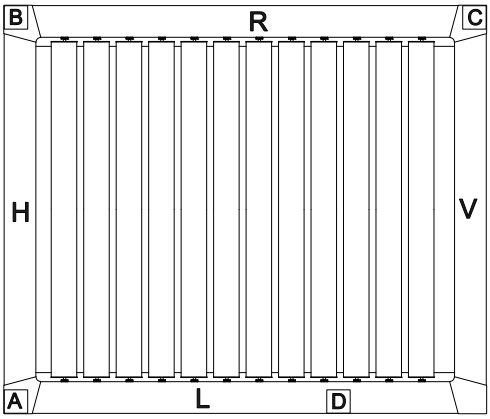

Combination with column setback left and right sides

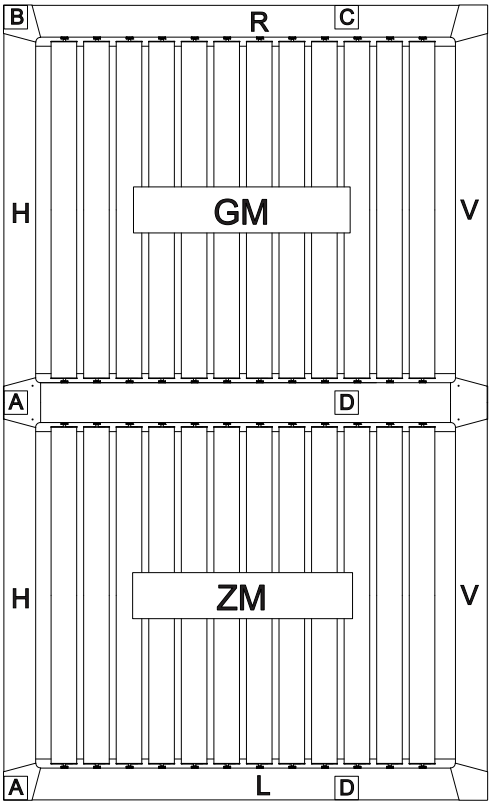

Combination with column setback in additional module left side

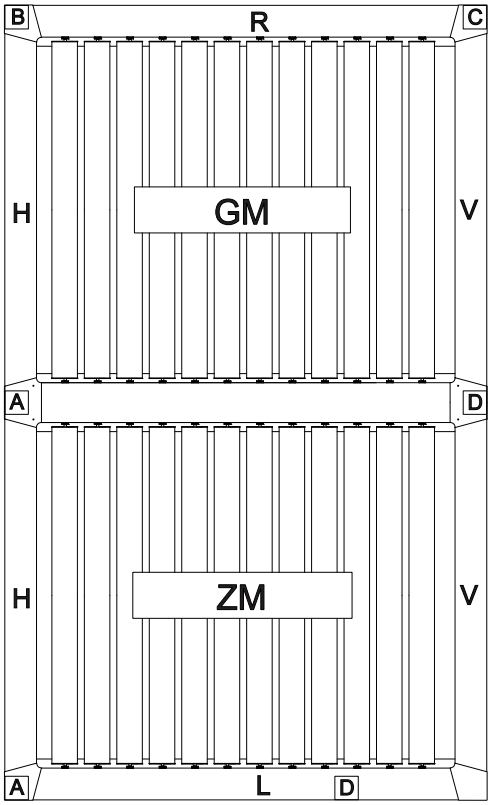

Legend

A, B, C, D	Column A, column B, column C, column D
L	Left side
R	Right side
V	At front
H	at back

GM	Basic module
ZM	Additional module

VENTUR ONE

Column setback

Depiction of column setback variants that are not feasible

Combination with different projections,
column setback left and right sides

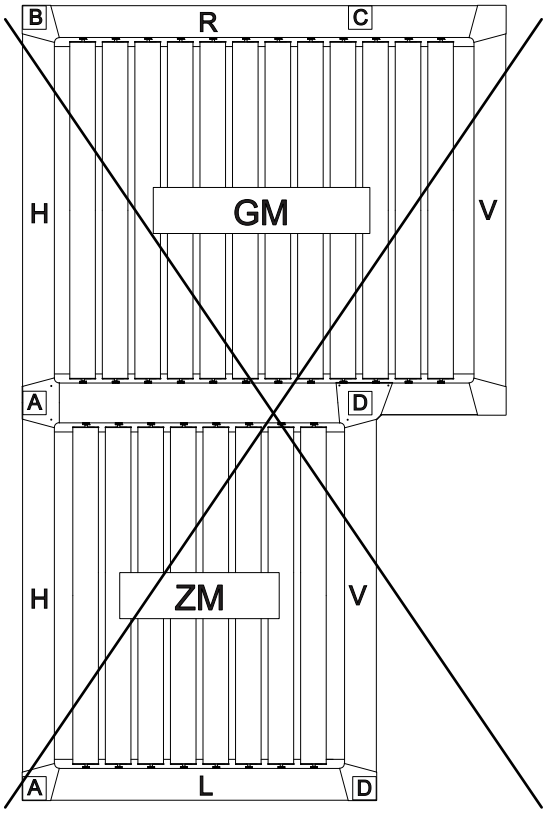

Combination with different
column setbacks left and right sides

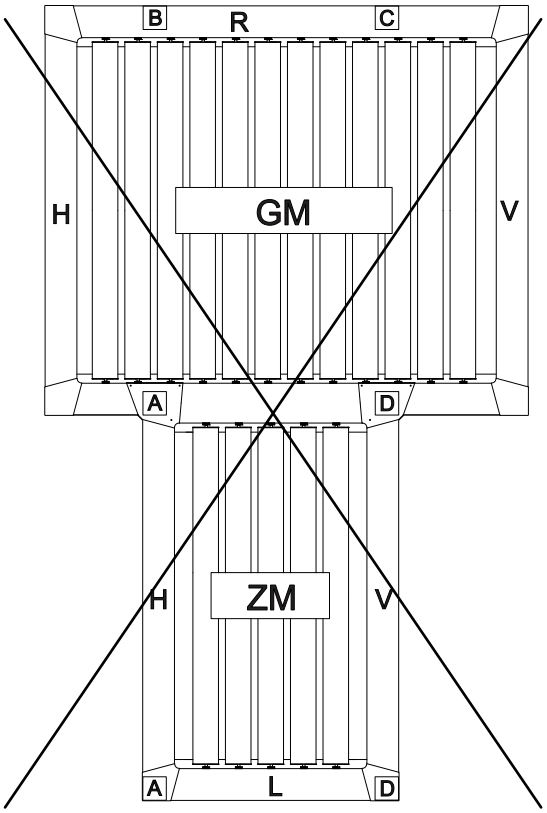

Legend

A, B, C, D	Column A, column B, column C, column D
L	Left side
R	Right side
V	At front
H	at back
GM	Basic module
ZM	Additional module

Intermediate columns (split)

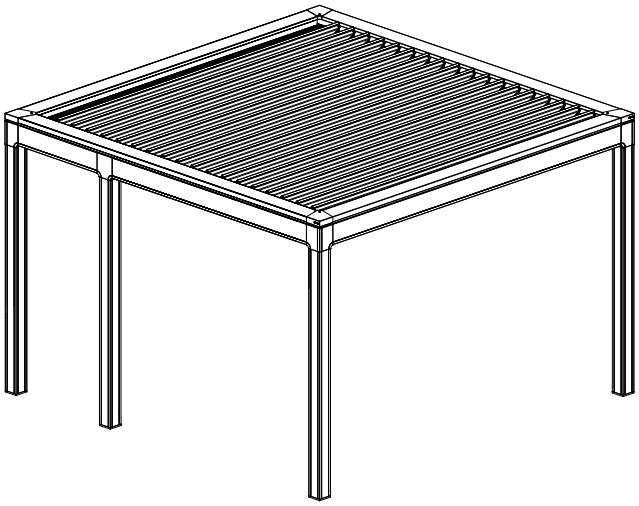

An optional intermediate column can be installed if needed. An intermediate column is required with a split VENTUR SIDE or VENTUR GLASS, or if the VENTUR SIDE or VENTUR GLASS does not extend over the entire length.
An intermediate column is also required for combinations with different overhangs.

Notes:

- Intermediate column position is measured only from the outer edge of the unit.
- The spacing between the corner columns and the intermediate column must always be at least 1040 mm. If setting back a corner column reduces the spacing below the minimum figure, the position of the intermediate column must also be adjusted.

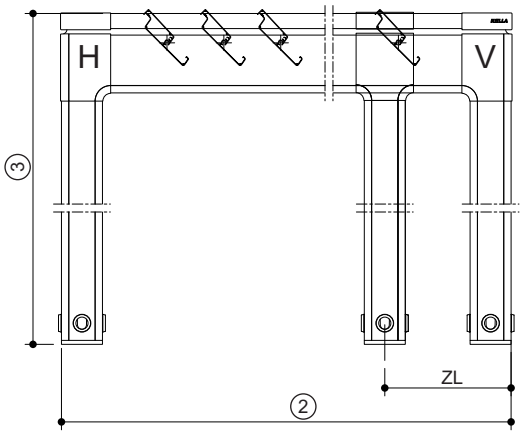

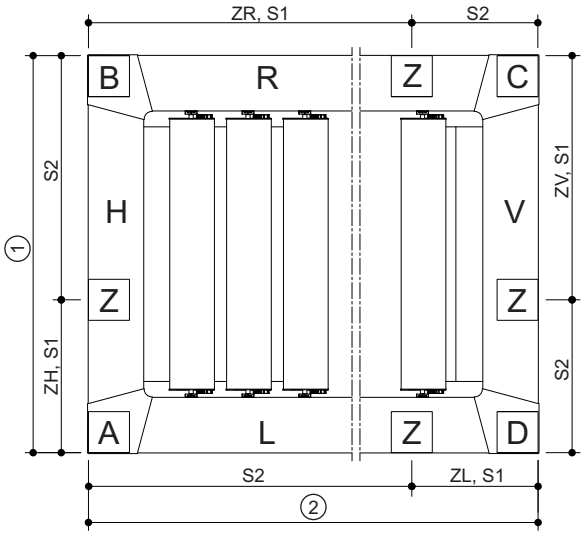

Legend

A, B, C, D	Column A, column B, column C, column D
L	Left side
R	Right side
V	At front
H	at back
Z	Intermediate column
S1	Side 1
S2	Page 2
ZH	Intermediate column position back
ZR	Intermediate column position right
ZV	Intermediate column position front
ZL	Intermediate column position left
①	Complete width (outer edge - outer edge)
②	Projection (outer edge - outer edge)
③	Complete height

Minimum spacing between corner and intermediate columns

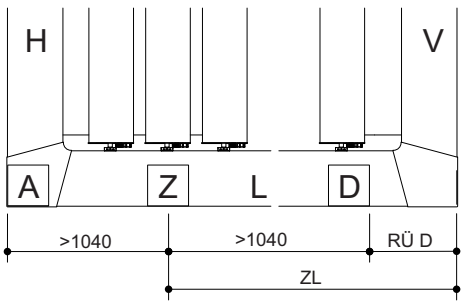

VENTUR ONE

Installation flush with wall (free-standing)

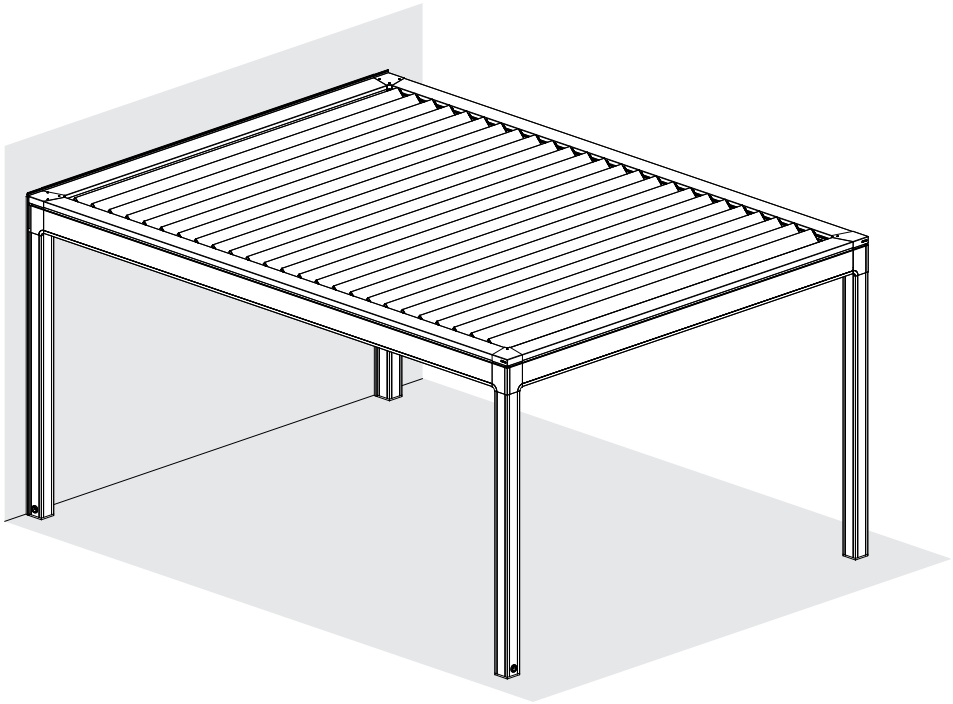

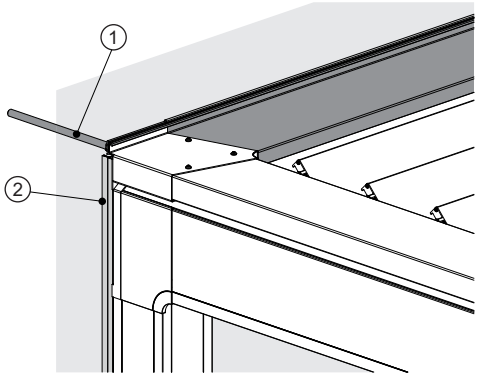

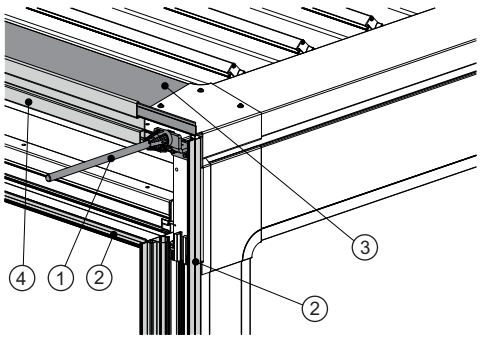

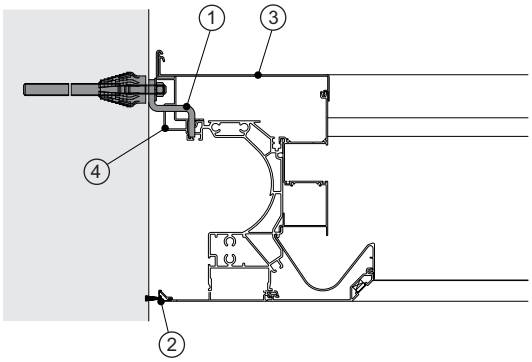

Legend

①	Wall bracket with Thermax anchor bolt (Thermax anchor bolt not included in the scope of supply)
②	Wall connection brush retainer profile
③	Wall side top board profile
④	Wall side adapter profile

VENTUR wall mounting

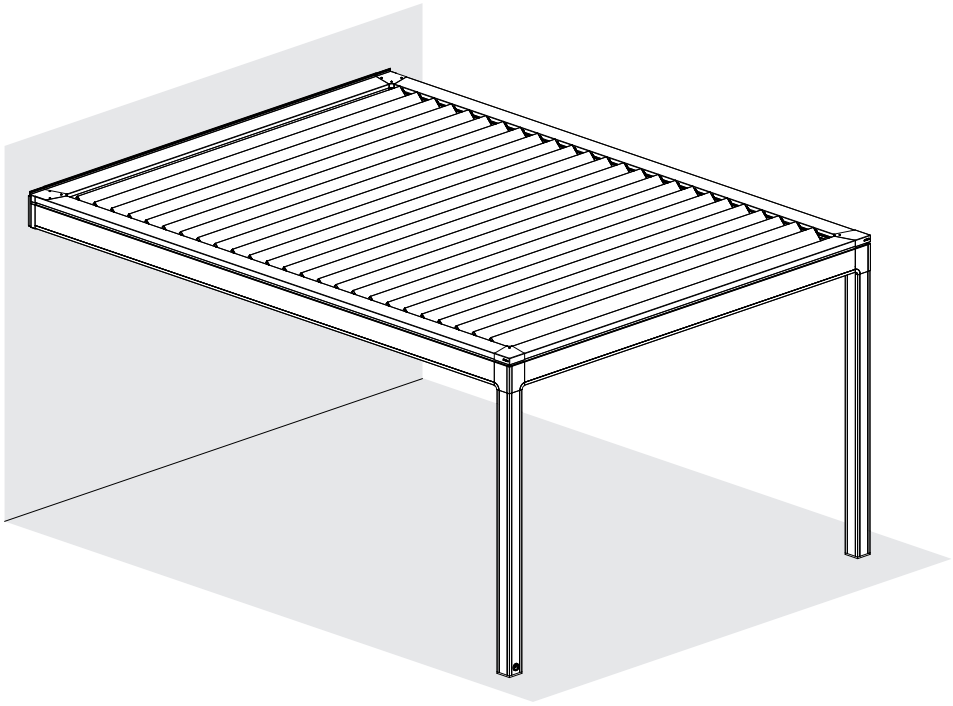

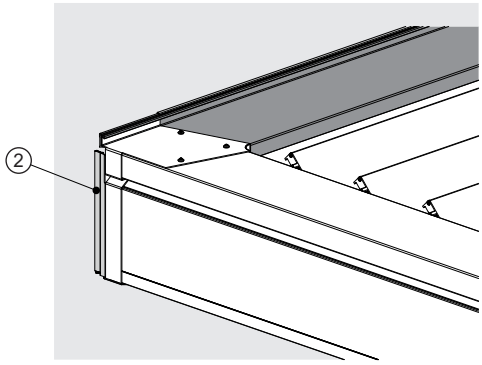

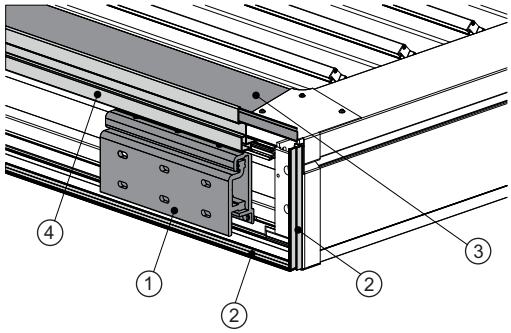

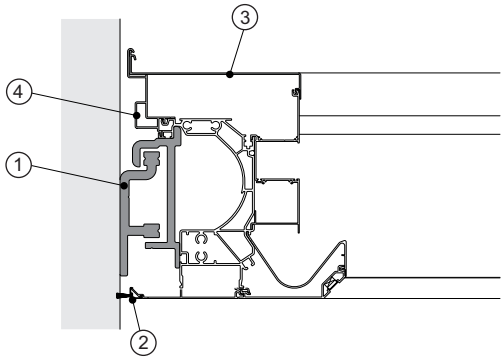

Legend

①	Mounting bracket for wall mounting
②	Wall connection brush retainer profile
③	Wall side top board profile
④	Wall side adapter profile

VENTUR ONE

Brackets

Wall bracket type B, without column

Art. no. 10210505

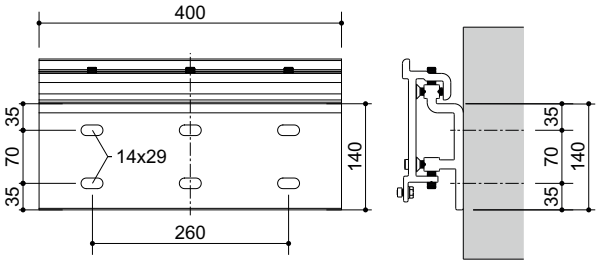

Wall bracket type F, with column

Art. no. 10210173

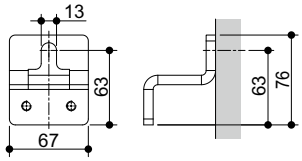

Number of mounting brackets per module

Single unit wall installation

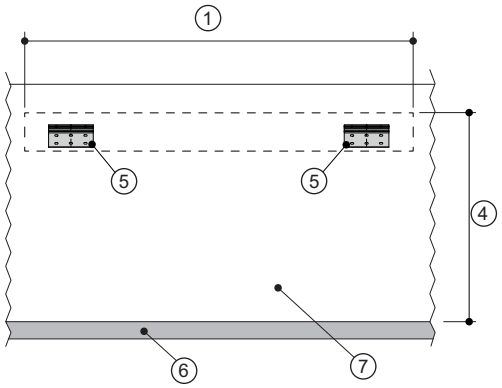

Double unit wall installation

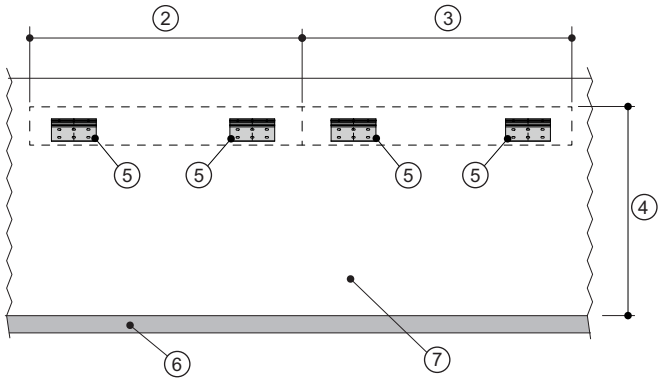

Single unit with installation flush with wall

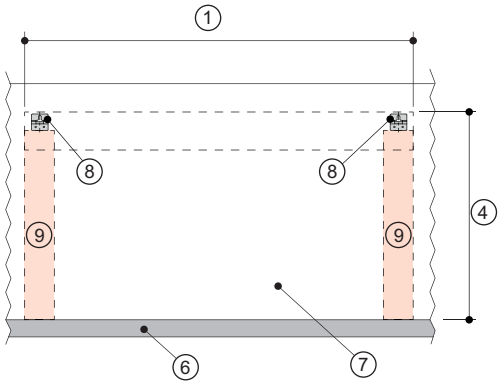

Double unit with installation flush with wall

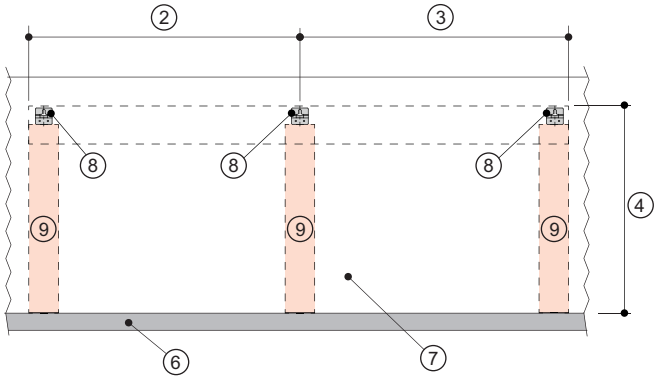

Legend

① Column outer edge - outer edge (complete width or projection)
② Column outer edge - central axis (complete width or projection)
③ Column central axis - outer edge (complete width or projection)
④ Complete height
⑤ Wall bracket type B for wall mounting
⑥ Floor
⑦ Wall
⑧ Wall bracket type F for installation flush with wall
⑨ Column flush with wall

Wall connection cover sheet

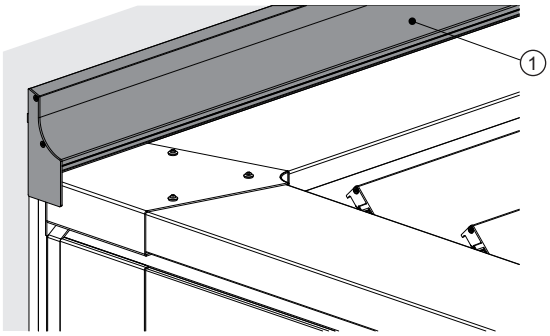

Legend

① Cover profile
② Support plate
③ Side cover
④ Sealing washer
⑤ Installation material (depends on installation base)
⑥ Sealing tape 12x4 mm
⑦ Spacer strip 15x3 mm
⑧ Compensation range max. 15 mm

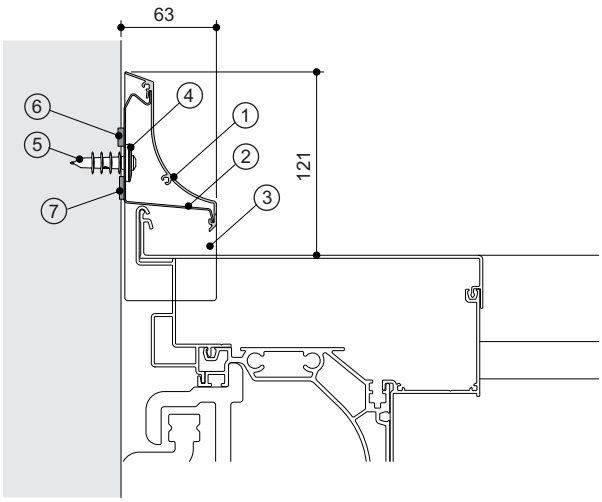

Note:

- The support plate is installed on the installation base and the cover profile is then suspended on or clipped into the bracket profile.
- The stainless steel support plate, which exhibits low expansion, is automatically separated with butt connectors. This prevents render cracking.
- The seal is protected from UV by the cover profile.
- The sealing tape ⑥ creates a second seal.

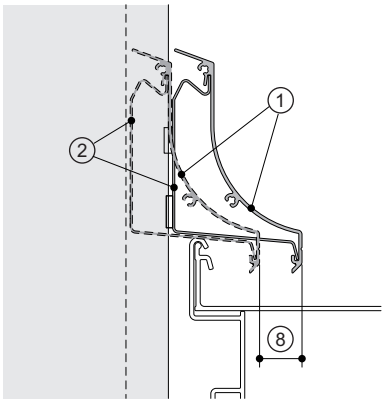

Wall connection top board compensation range

The wall connection top board has a compensation range of max. 15 mm, which is sufficient to accommodate minor variations between the wall connection top board installation base and the VENTUR ONE.

VENTUR ONE

Butt joint

Straight butt joint (automatic)

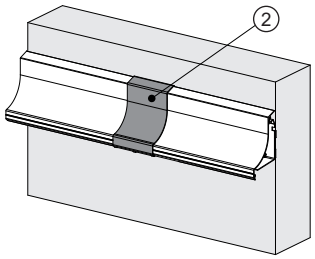

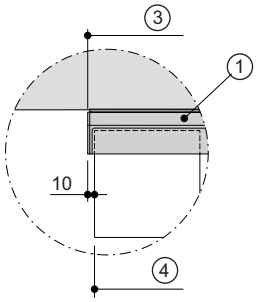

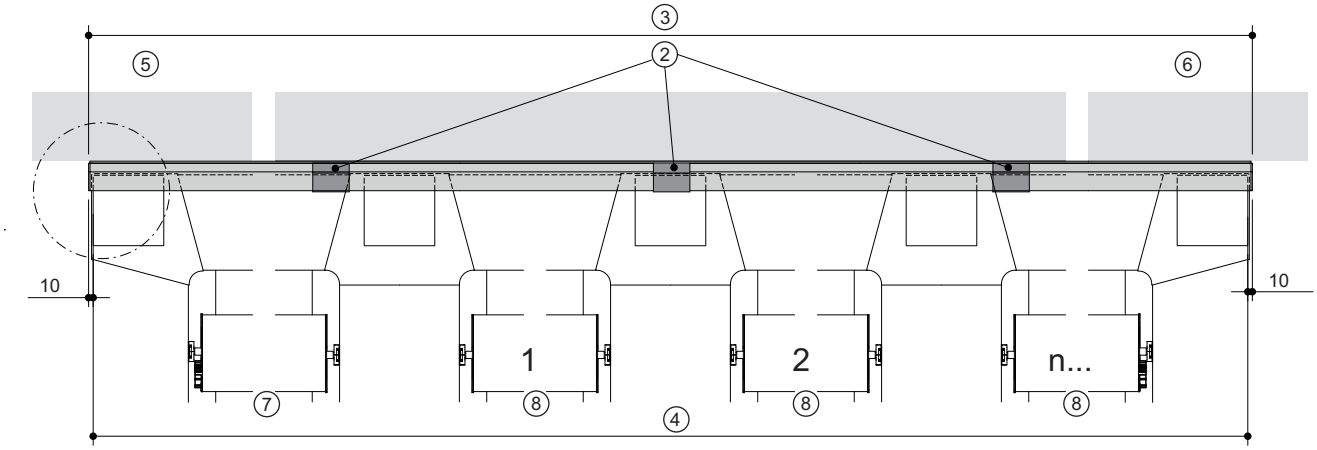

Inside corner 90°

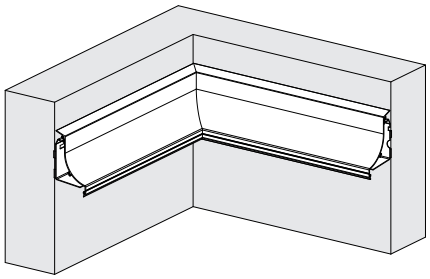

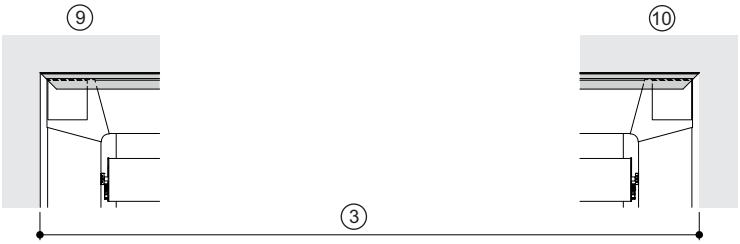

Outside corner 90°

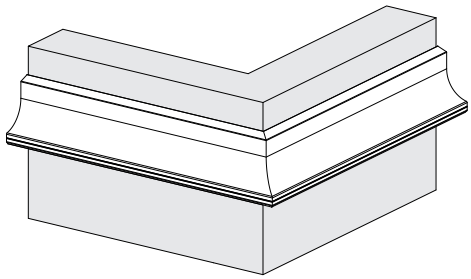

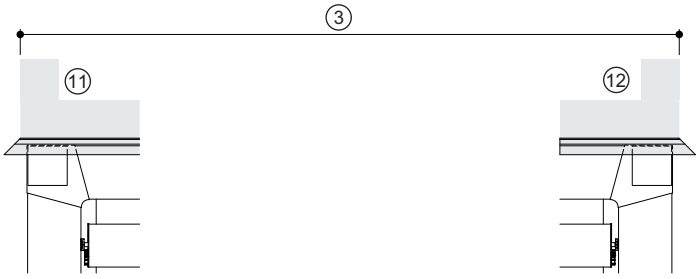

Legend

①	Wall connection top board	⑦	Basic module
②	Butt connector	⑧	Additional module
③	Complete width wall connection top board	⑨	Inside corner on the left side
④	Complete width of unit	⑩	Inside corner on the right side
⑤	Straight closure on the left side	⑪	Outside corner left
⑥	Straight closure on the right side	⑫	Outside corner right

Notes:

- The butt joint is used on both sides for wall connection top boards with a complete width in excess of 7000 mm and for inside corners.
- The butt joints are distributed evenly over the length of the wall connection top board.

Combination possibilities

Free-standing combinations

Combination with additional module at the front

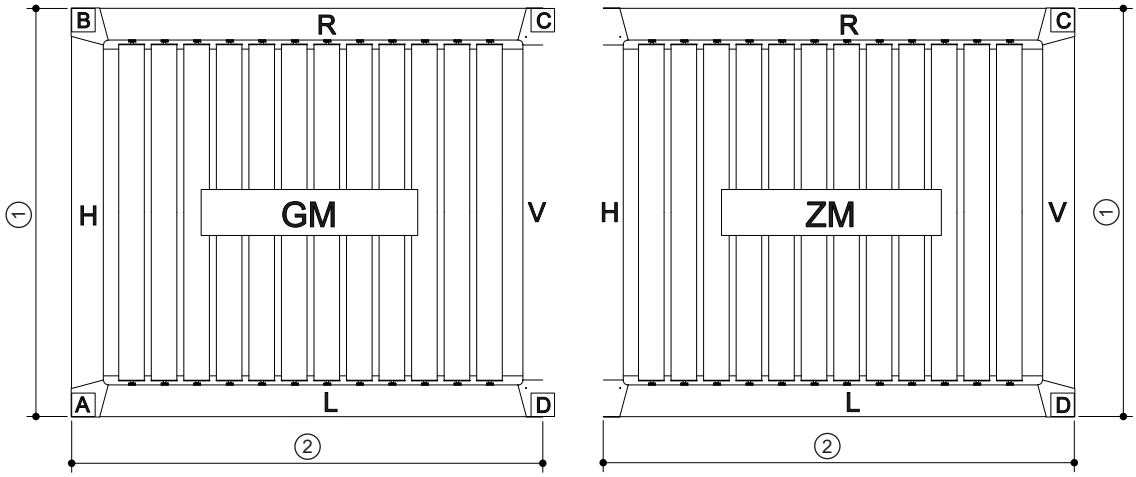

Combination with additional module at the side

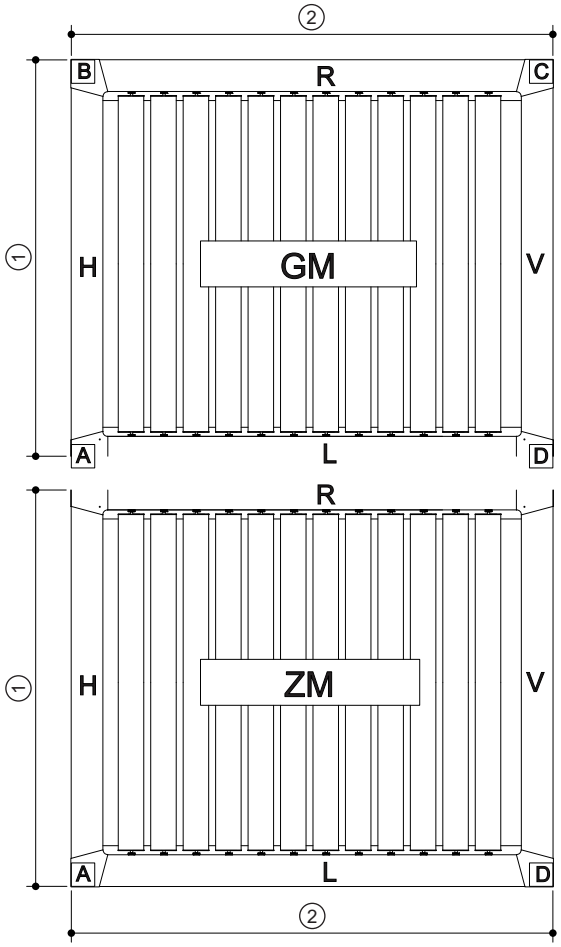

Combination with additional module at the side, different projections

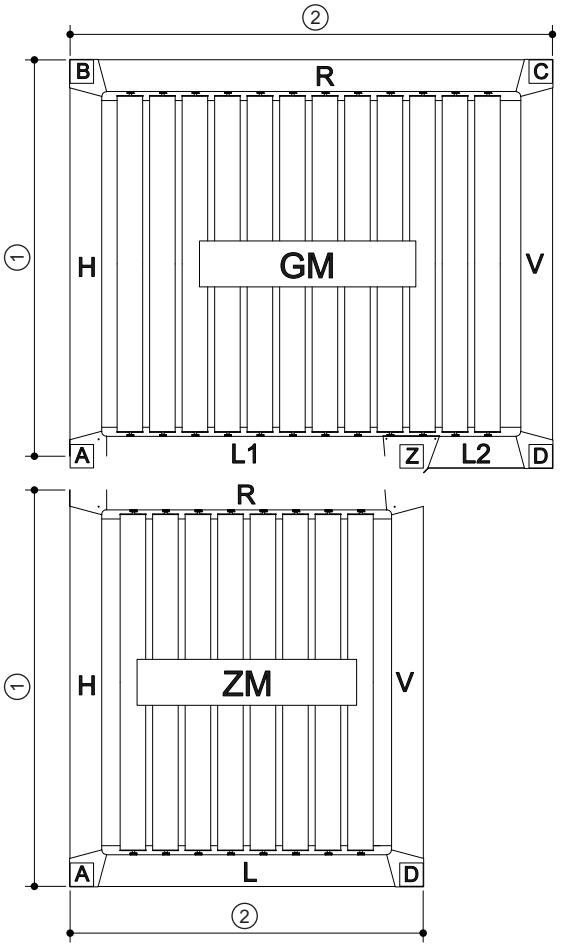

Legend

A, B, C, D	Column A, column B, column C, column D	V	Front
Z	Intermediate column	H	at back
L	Left side	GM	Basic module
L1	Left side 1	ZM	Additional module
L2	Left side 2	①	Complete width (outer edge - outer edge)
R	Right side	②	Projection (outer edge - outer edge)

VENTUR ONE

Combination possibilities

Free-standing combinations

Combination with additional module at the front, additional module with different slat orientation

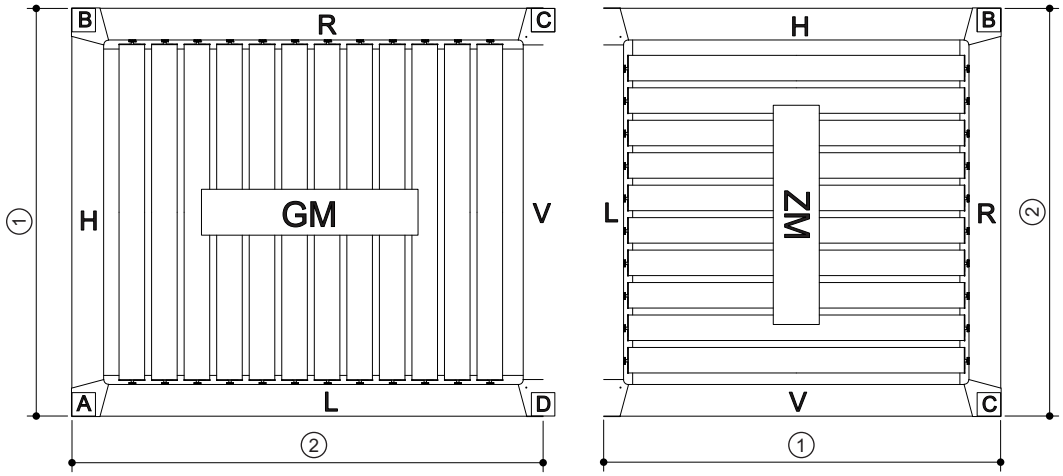

Combination with additional module at the front, additional module with different slat orientation

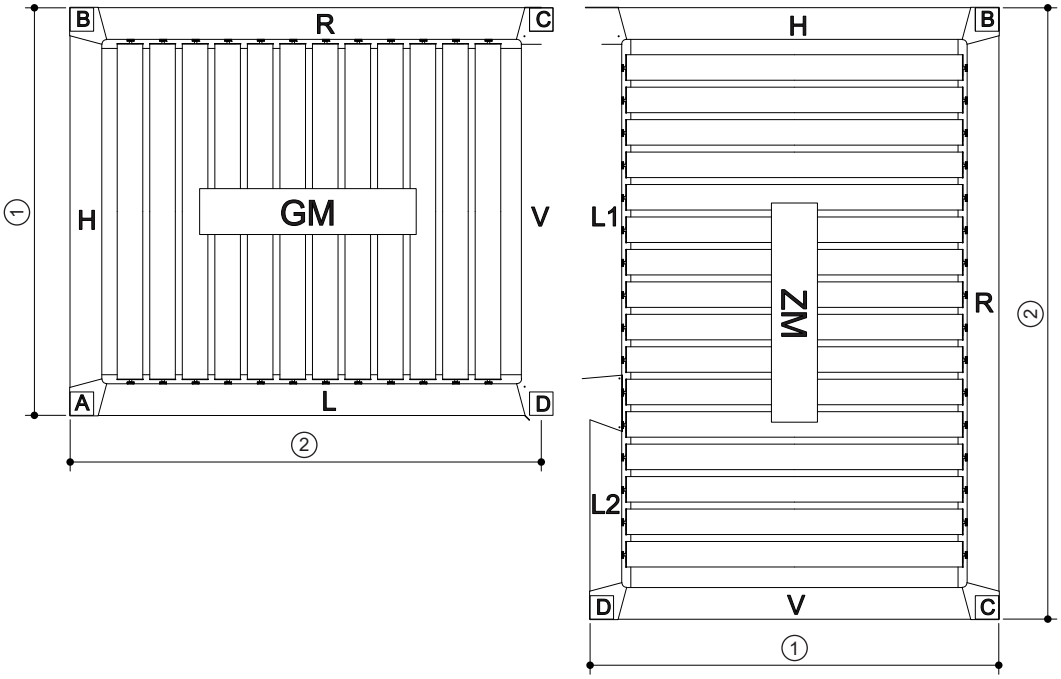

Legend

A, B, C, D	Column A, column B, column C, column D	V	Front
Z	Intermediate column	H	at back
L	Left side	GM	Basic module
L1	Left side 1	ZM	Additional module
L2	Left side 2	①	Complete width (outer edge - outer edge)
R	Right side	②	Projection (outer edge - outer edge)

Combination with two additional modules

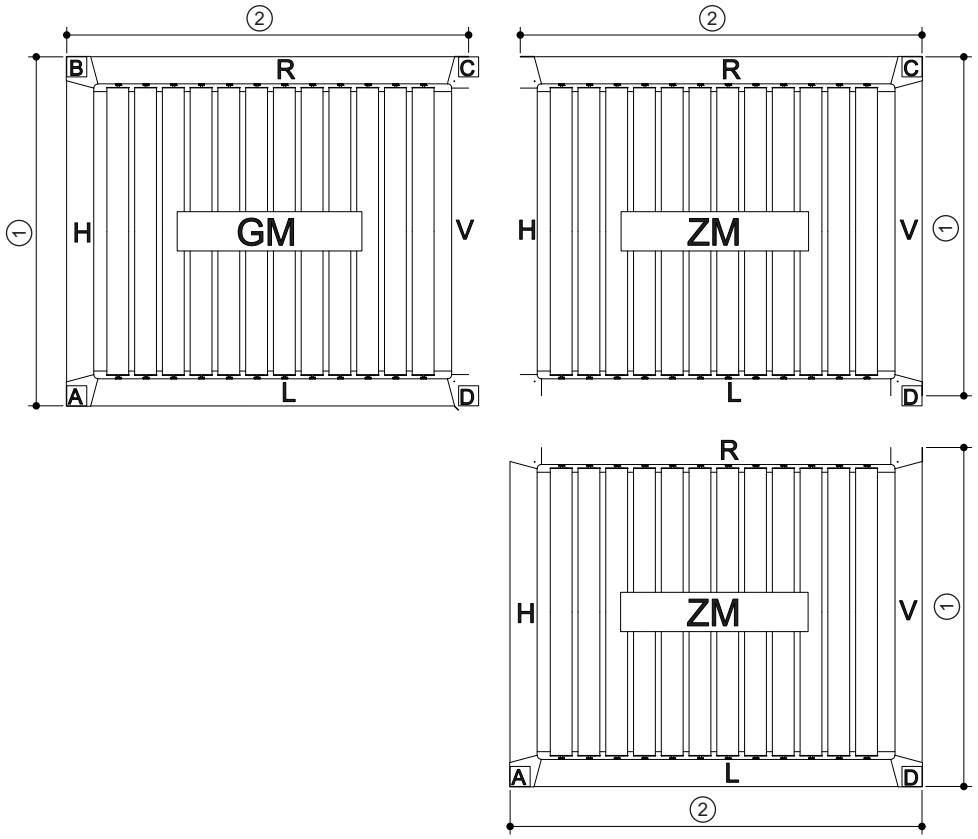

Combination with three additional modules

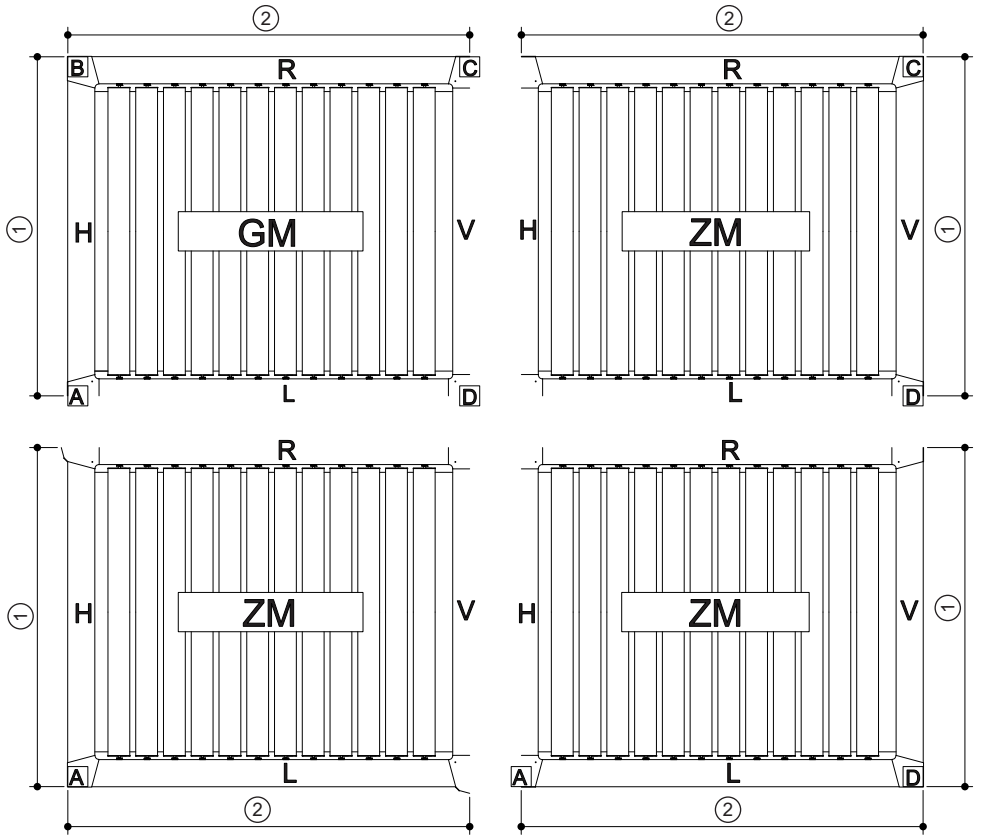

VENTUR ONE

Combination possibilities

Wall-mounted combinations

Combination with additional module at the front

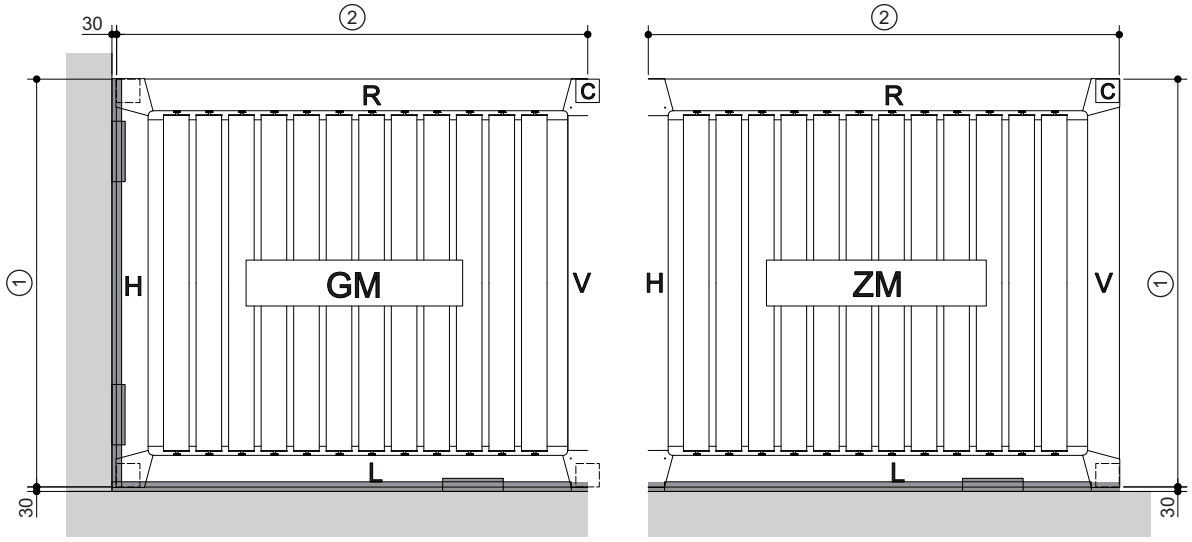

Combination with additional module at the side, different projections

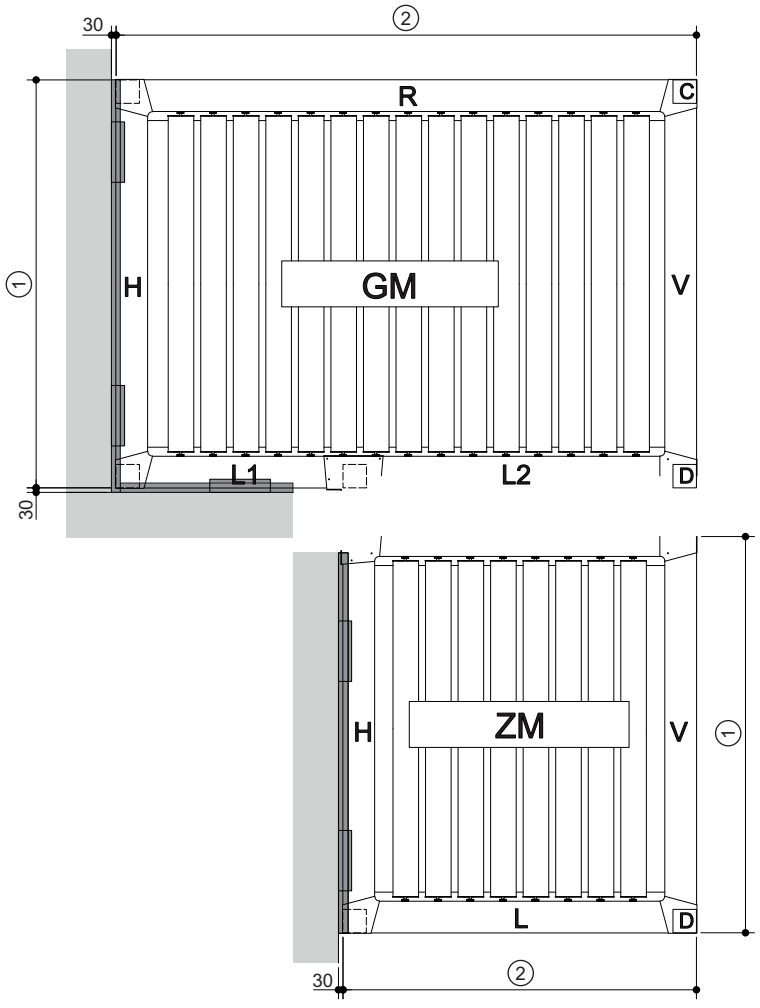

Combination with two additional modules

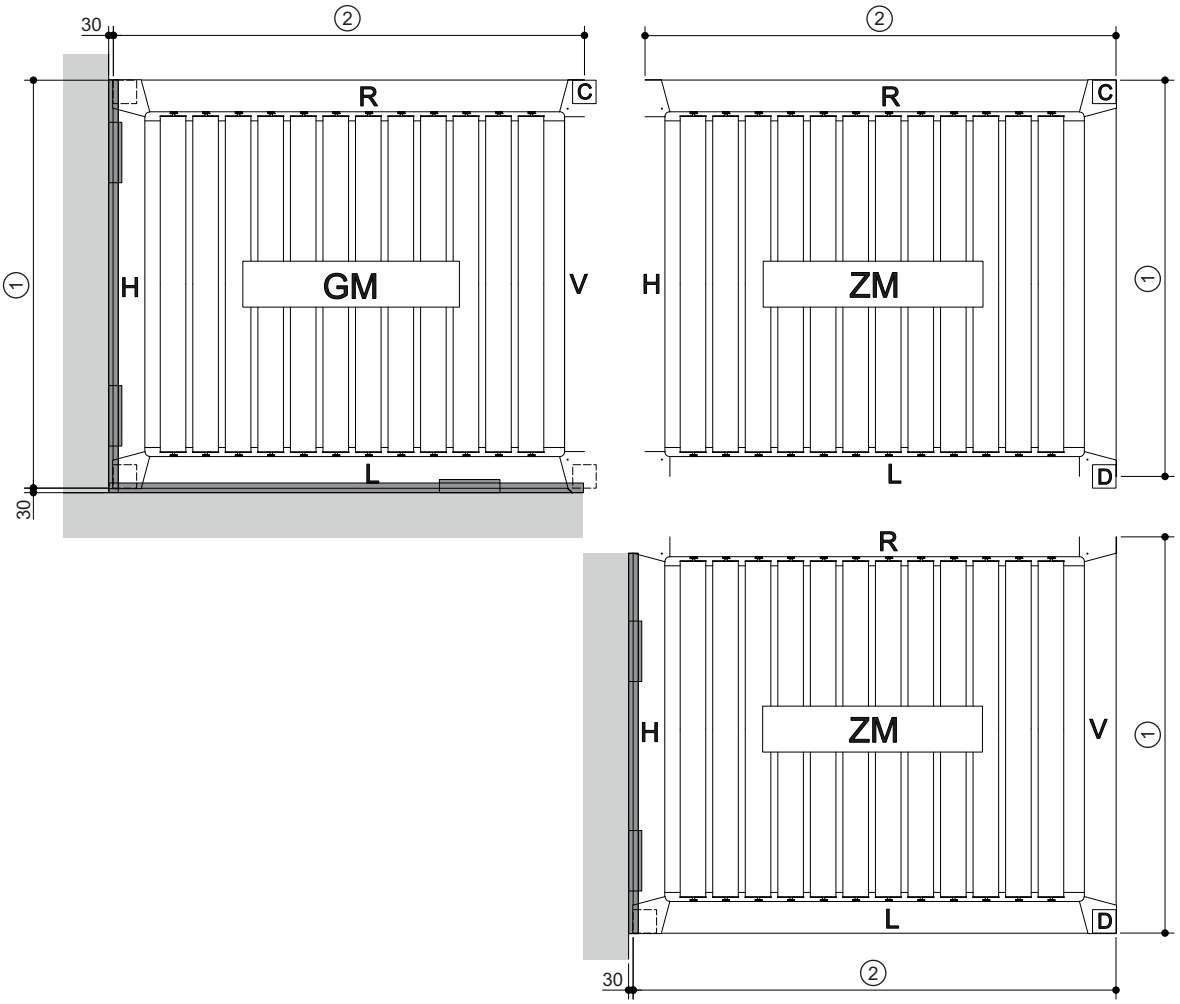

Legend

A, B, C, D	Column A, column B, column C, column D	V	Front
Z	Intermediate column	H	at back
L	Left side	GM	Basic module
L1	Left side 1	ZM	Additional module
L2	Left side 2	①	Complete width (outer edge - outer edge)
R	Right side	②	Projection (outer edge - outer edge)

VENTUR ONE

Installation situation for different wall constructions

Mounting base: Concrete wall plastered

Wall mounting in the CONCRETE CEILING
with injection anchor bolt set

Vertical section

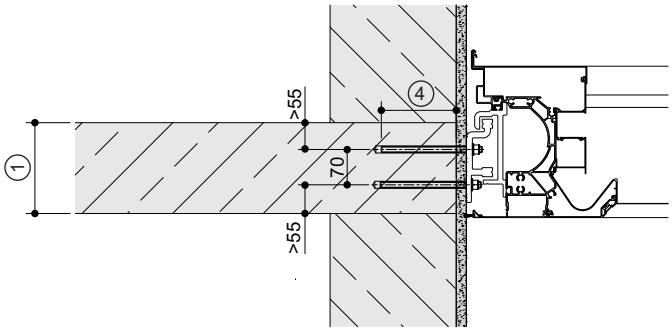

Horizontal section

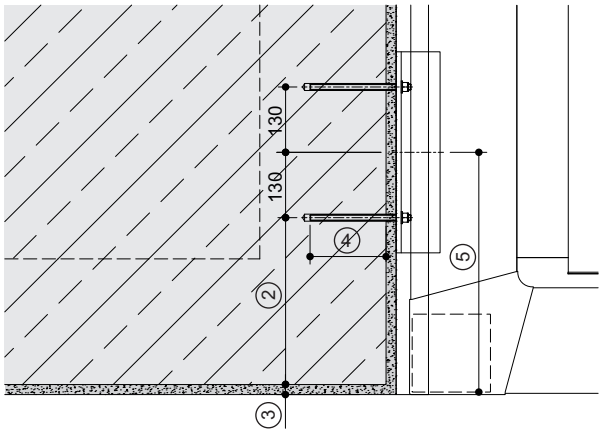

Horizontal section with 2 units at the corner of the wall

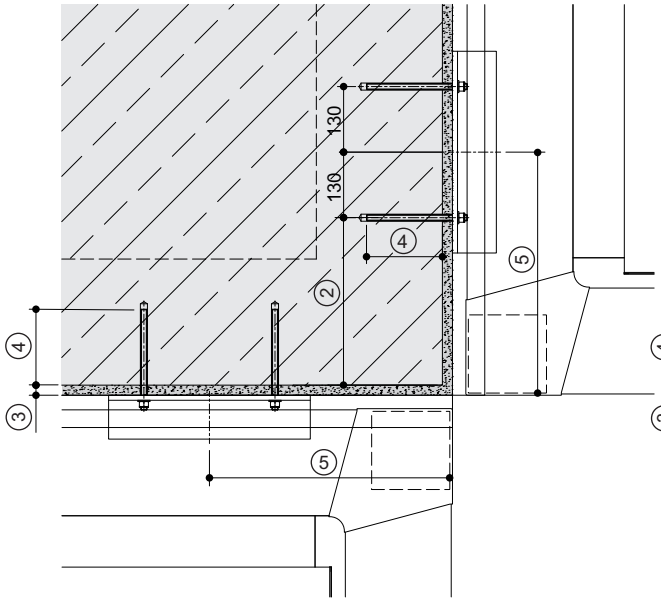

Wall mounting in the CONCRETE WALL
with injection anchor bolt set

Vertical section

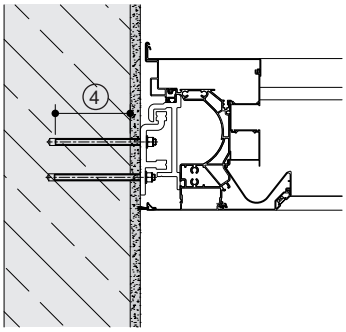

Horizontal section

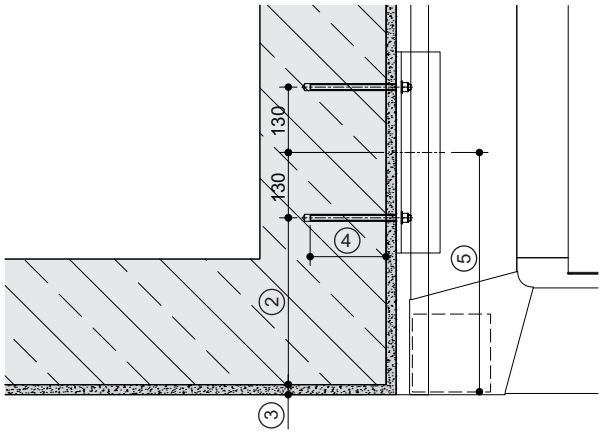

Horizontal section with 2 units at the corner of the wall

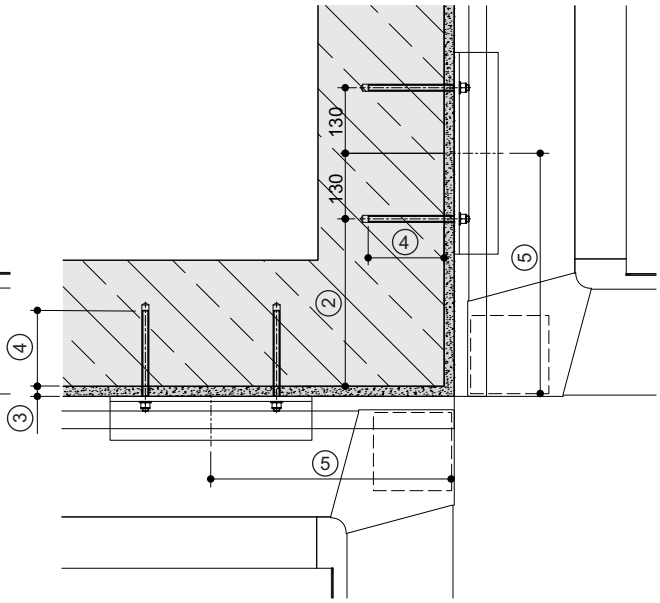

Legend

①	Thickness of the ceiling	④	Anchorage depth
②	Minimum distance from edge 280 mm	⑤	Bracket position (600-700 mm)
③	Plaster/insulation thickness		

Horizontal section with 3 units at the corner of the wall

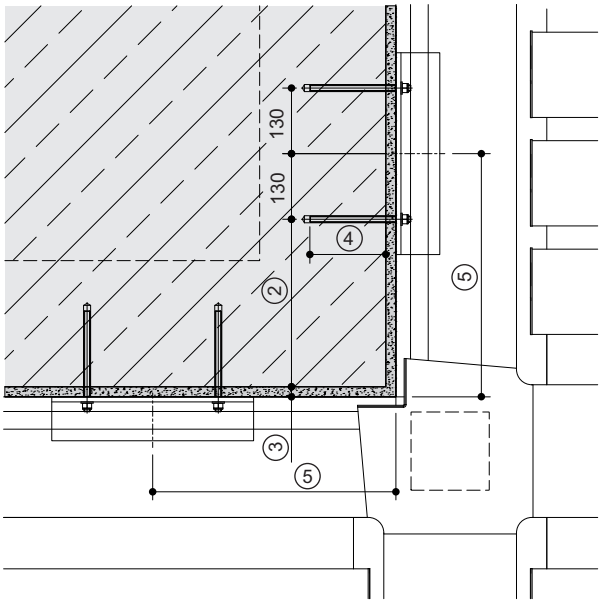

Horizontal section with 2 units, differing overhangs at corner of wall

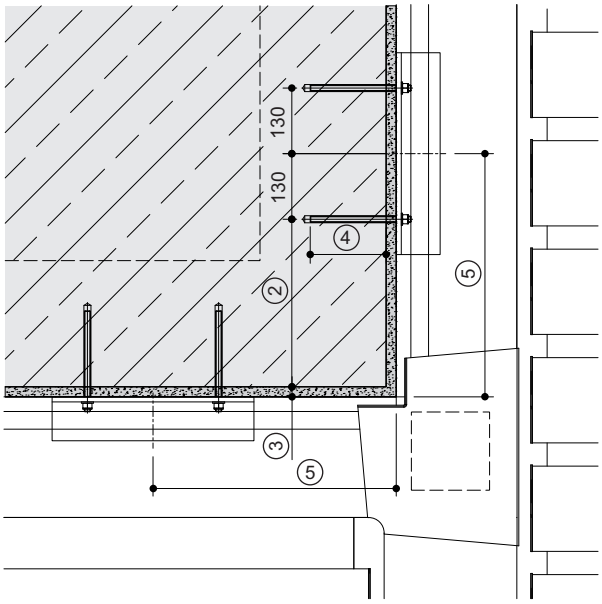

Legend

① Thickness of the ceiling
② Minimum distance from edge 280 mm
③ Plaster/insulation thickness
④ Anchorage depth
⑤ Bracket position (600-700 mm)

VENTUR ONE

Mounting base: Brick wall with ETICS

Installation flush with wall in the CONCRETE CEILING
with Thermax

Vertical section

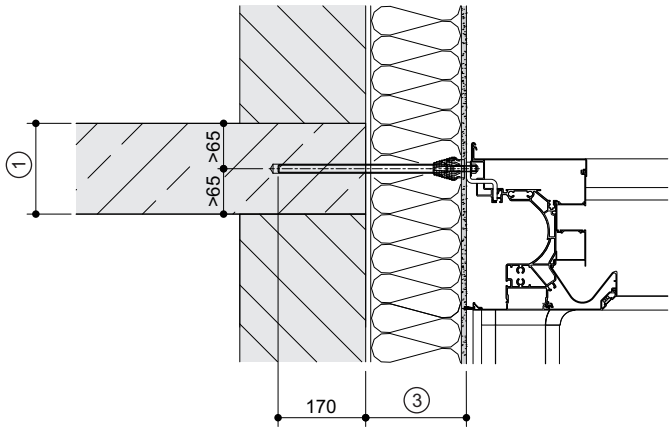

Horizontal section

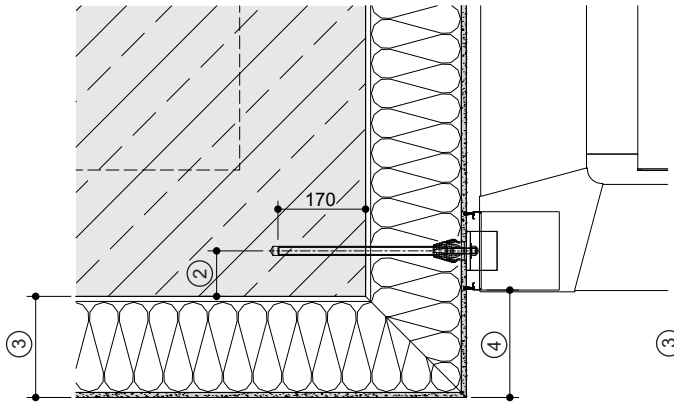

Horizontal section with 2 units at the corner of the wall

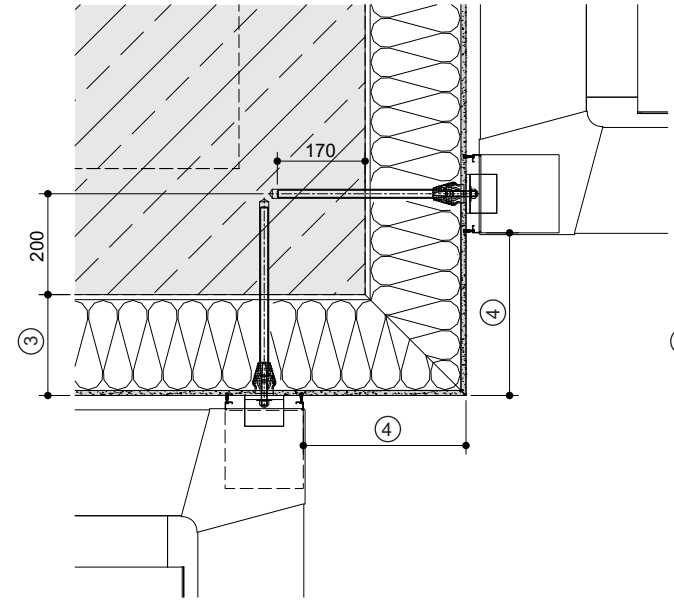

Installation flush with wall in the BRICK WALL
with Thermax and anchor sleeve

Vertical section

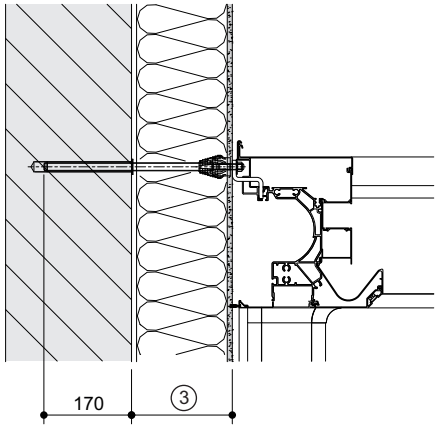

Horizontal section

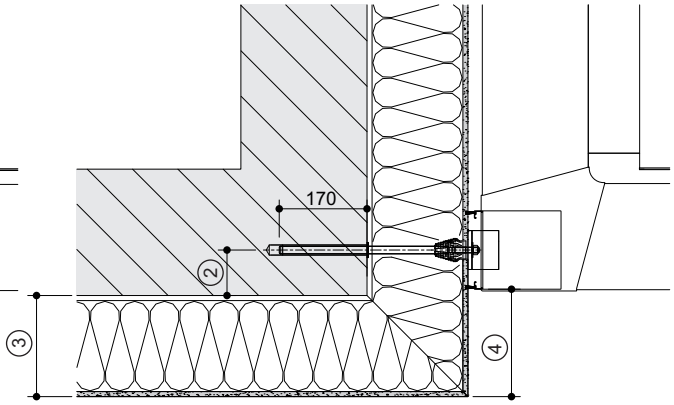

Horizontal section with 2 units at the corner of the wall

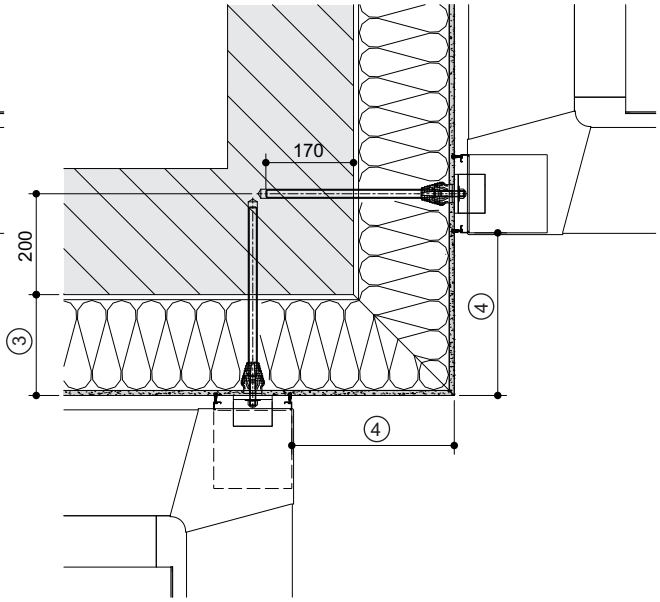

Legend

①	Thickness of the ceiling	③	Plaster/insulation thickness
②	Minimum distance from edge 65 mm	④	Offset

Horizontal section 2 units, differing overhangs at corner of wall, min./max. dimensions for wall mounting (without column)

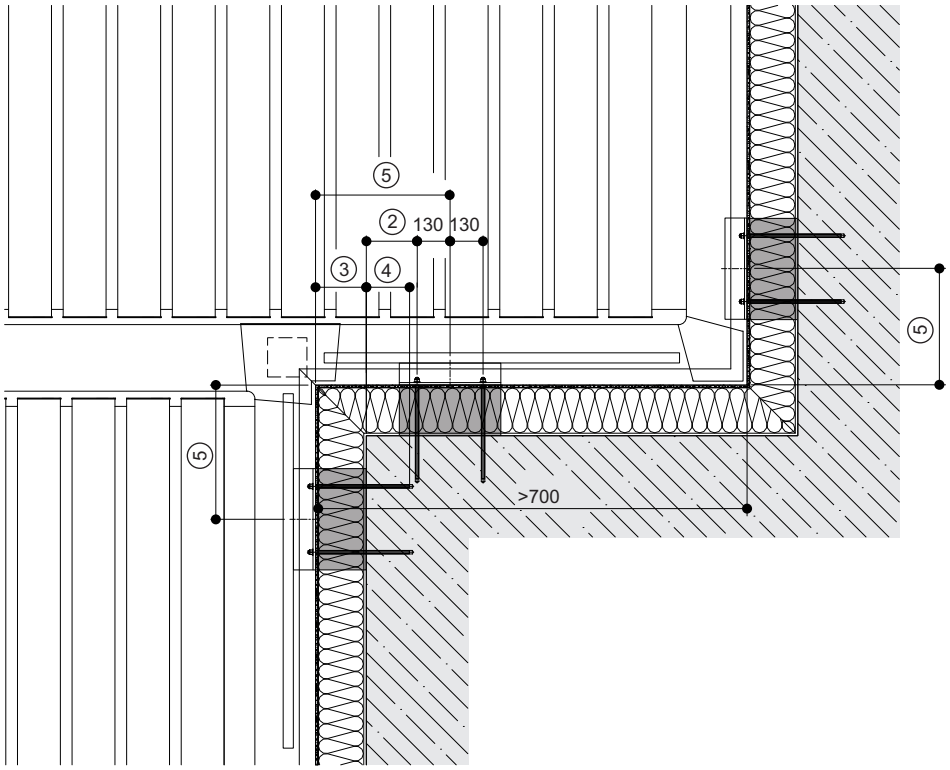

Horizontal section 2 units, differing overhangs at corner of wall, min./max. dimensions for wall mounting (with column)

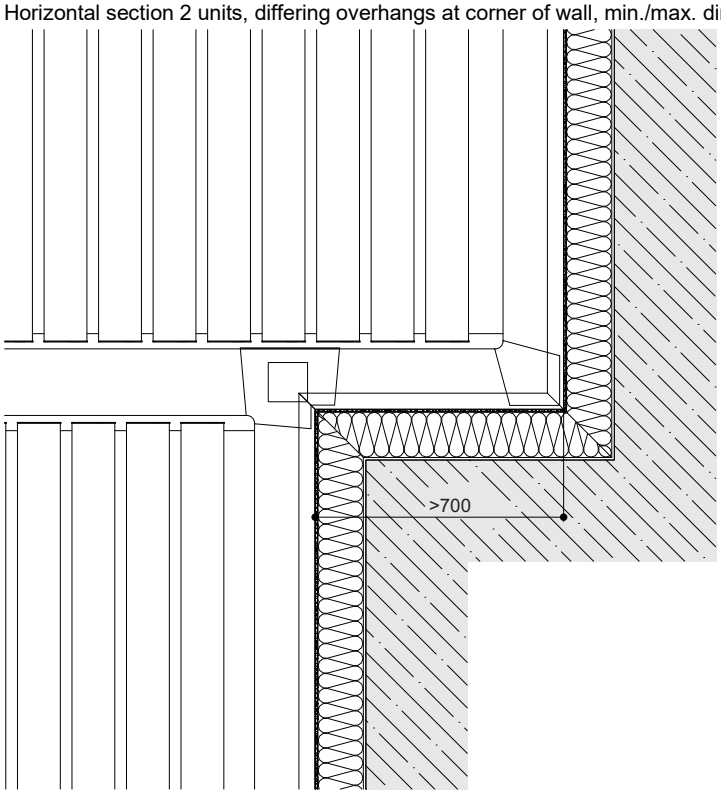

Legend

①	Thickness of the ceiling	④	Anchorage depth
②	Minimum distance from edge 280 mm	⑤	Bracket position (600-700 mm)
③	Plaster/insulation thickness		

VENTUR SIDE

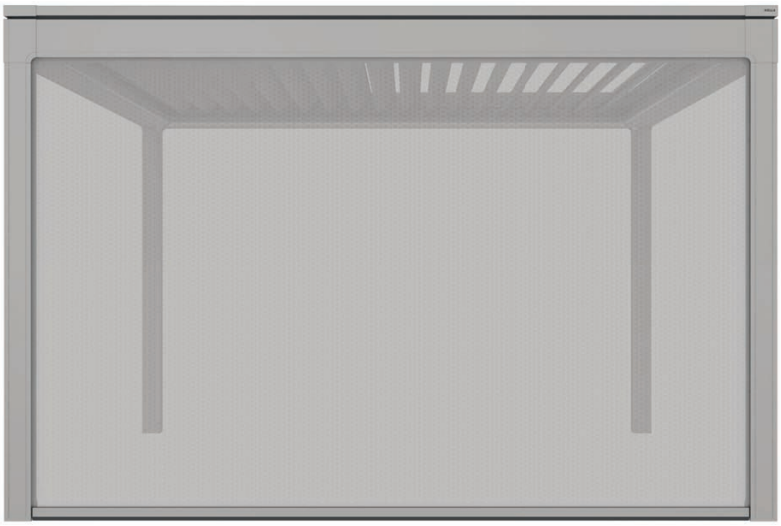



Perfect integration of the roller tube into the slat roof structure, can be retrofitted at any time



Guide rail fully integrated into the column



Straightforward access for ease of maintenance

Limit sizes

	VENTUR SIDE
Single unit	
Minimum width [mm]	810
Maximum width [mm]	6200
Maximum height [mm]	3000
Maximum area [m^2]	18.6

Note: The width specifications are from outer edge to outer edge of the VENTUR ONE.

Cover

	Glass fibre/acrylic fabric	Polyester- PVC-coated	SOLTIS Veozip Color	Polyester fabric - PVC-free	Waterproof fabrics
Max. width [mm]*	6200	5000	6200	6200	4500
Max. height [mm]	3000	3000	3000	3000	3000
Max. area [m^2]	18.6	15.5	18.6	18.6	13.5

Scope of supply

- Integrated side-seam guided vertical awning VENTUR SIDE
- Motor with integral ONYX or Somfy io control system
- Operation via multichannel radio remote control
- Control via smartphone and the ONYX app (only if ONYX controller selected)
- Free ONYX cloud connection via WLAN or LAN (only if ONYX controller selected)
- Building integration: Amazon Alexa, Google Home, IFTTT, KNX, Loxone (only if ONYX controller selected)
- Sensors for sun, wind and frost
- Standard colors for the frames according to HELLA Color worlds
- Standard glass fibre fabric

Supplementary equipment

- Wide range of glass fibre fabrics and PVC-coated and PVC-free polyester fabrics.
- Sensors for temperature and for rain and snow detection

Benefits of the product

- Heat protection
- Protection against the cold
- Glare protection
- Privacy
- Protection against UV radiation
- Wind protection
- Rain protection
- Patented live information concerning position and motion of the shading element via the ONYX app (only if ONYX controller selected)

View

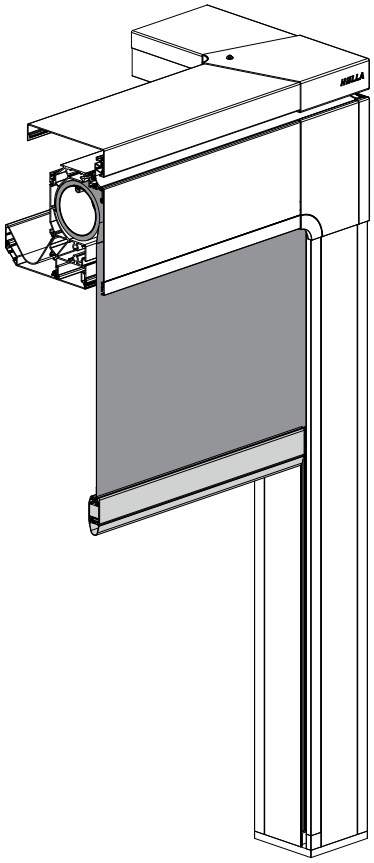

Vertical section

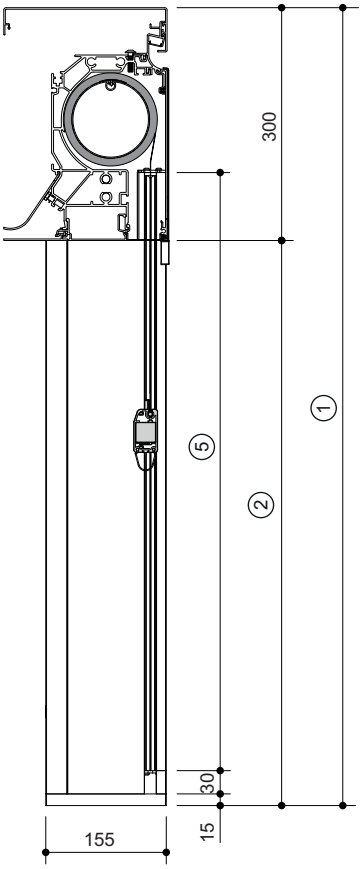

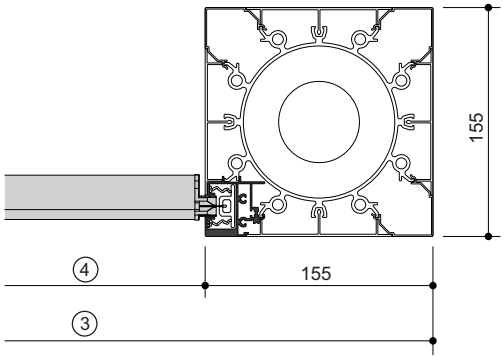

Legend

① Complete height VENTUR ONE
② Clear height
③ Complete width VENTUR ONE
④ Clear width
⑤ Guide rail length

Notes:

- VENTUR SIDE can be installed on all four sides.
- VENTUR SIDE and VENTUR GLASS can also be combined on the same side.

VENTUR SIDE

Combination over inside corner

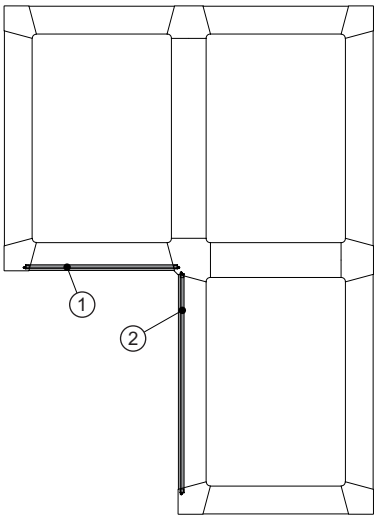

Combination with different overhangs

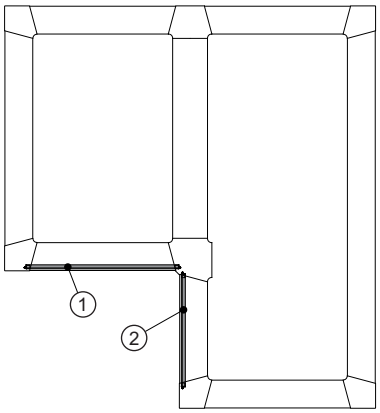

Legend

① VENTUR SIDE
② VENTUR SIDE

Notes:

- In the case of a combination over an inside corner or a combination with differing overhangs, VENTUR SIDE can only be used for one element – only ① or ② and not both at the same time.

Substrate with incline

The front rail of the VENTUR SIDE always closes **horizontally**.
Slight irregularities can be levelled out via the sealing profile in the front rail. If the substrate is inclined, an open gap will appear between the front rail and the substrate.

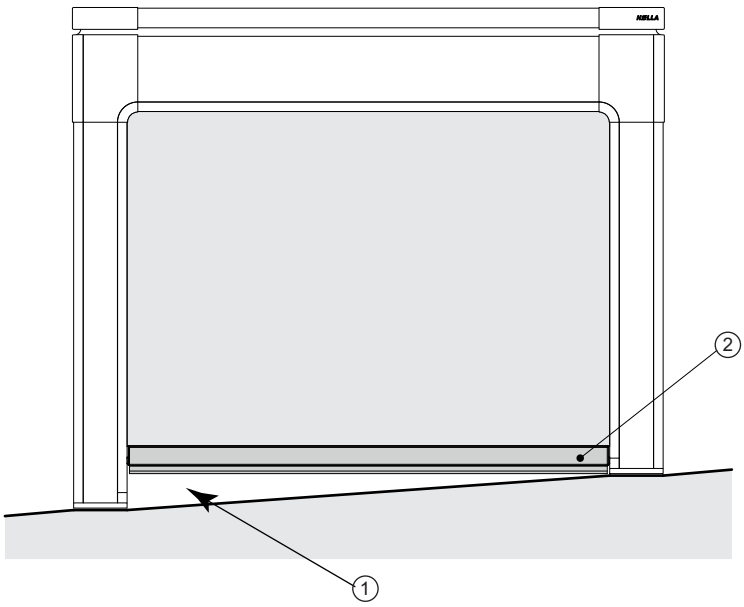

Legend

① Gap between front rail and substrate
② Front rail with sealing profile

G-Screen/SATINÉ 5500/Serge 600

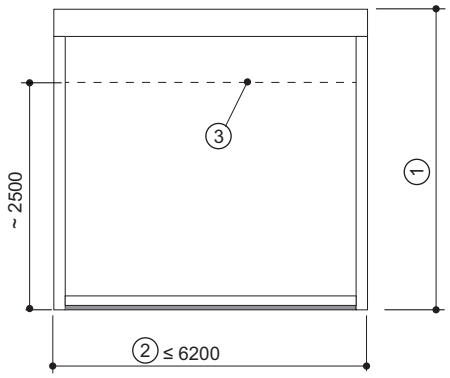

Twilight Comfort/Elements/Pearl

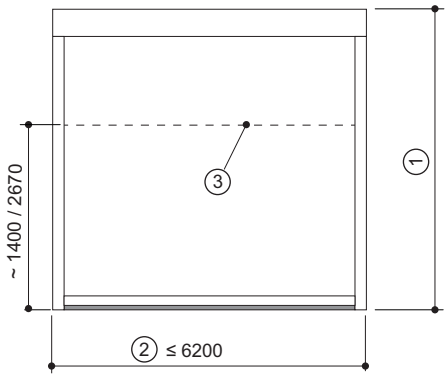

SOLTIS Veozip

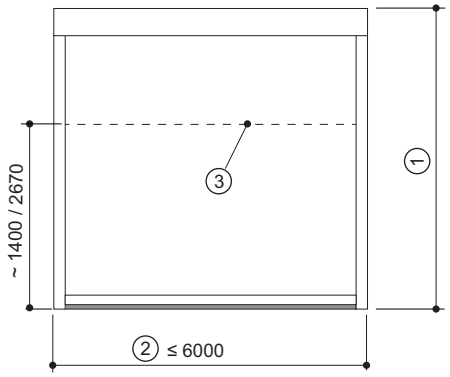

SOLTIS 86/88/92/Proof W96

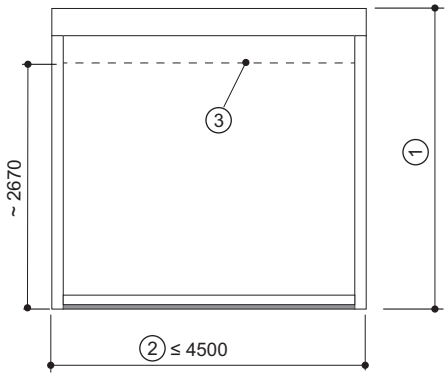

Legend

① Complete height
② Complete width
③ Horizontal weld seam

A horizonal heat sealing cannot be excluded when using a ready produced cover (depending on the material). The web widths can be found in the collection folders.

Visual phenomenons of these covers:

- Waves and wrinkels cannot be completely avoided with side seam guided units and are no reason for complaints.
- These arise at the crossing to the zipper. This can occur, because cover and zipper lie on top of each other and cover different paths during winding. As a result of this, the cover is folded several times over the circumference on the edge during winding. This becomes visible as wrinkle or wave.
- These appearances are intensified by the effects of the weather.
- This issue occurs mostly when using inflexible fabrics such as SOLTIS.

VENTUR SIDE

Detection of obstacles

Operating principle Somfy Maestria+ 50 io

Obstacle detection in **down direction**:

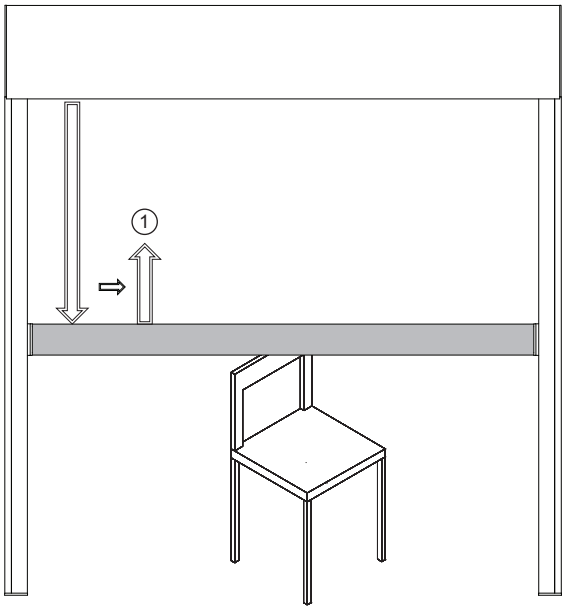

- System moves downwards
- Obstacle
- Unit stops and moves back half a drive rotation in order to relieve the obstacle
- Unit remains in this position

Notes:

- The obstacle detection is active during the entire downward movement.
- If the lower end position is set too low, it is treated like an obstacle.

Blocking detection in **Up direction**:

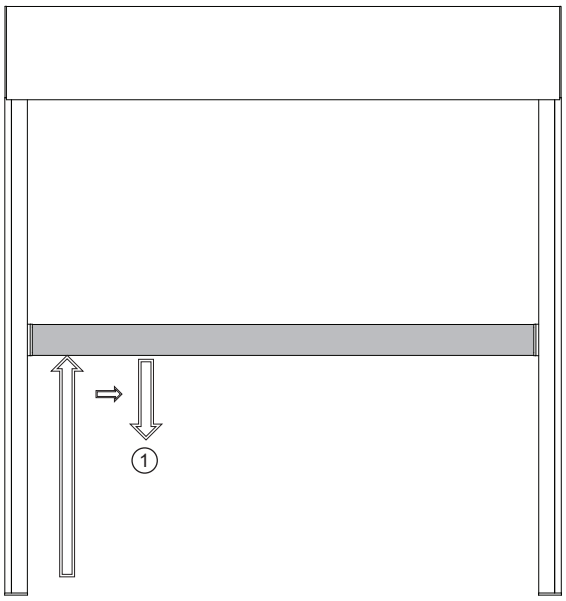

- System moves up
- Obstacle
- System stops and relieves load
- System remains in this position

Notes:

- A direct Up command is not admissible after that.
- The obstacle detection is active during the entire upward movement.

Legend

① STOP

Operating principle of the ONYX wireless motor

Obstacle detection in the **Down direction** (if the obstacle remains in place):

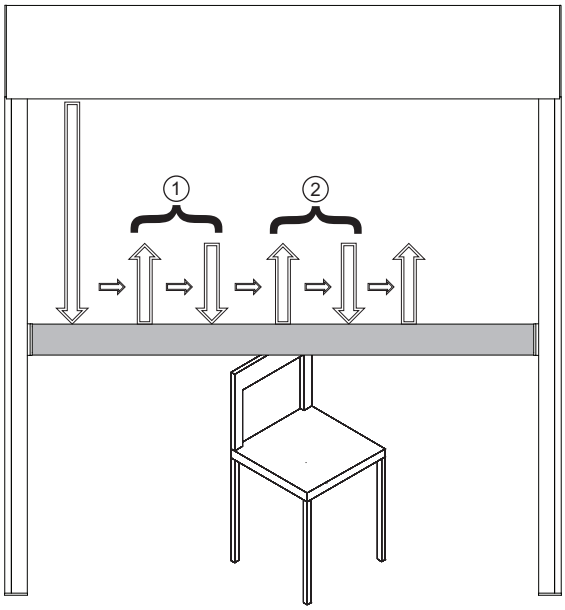

- System moves downwards
- Obstacle
- System stops and slightly moves back
- System moves down again
- Obstacle still present
- System stops and slightly moves back
- System moves down again
- Obstacle still present
- System stops and slightly moves back

Blocking detection in the **Up direction** (if the obstacle remains in place):

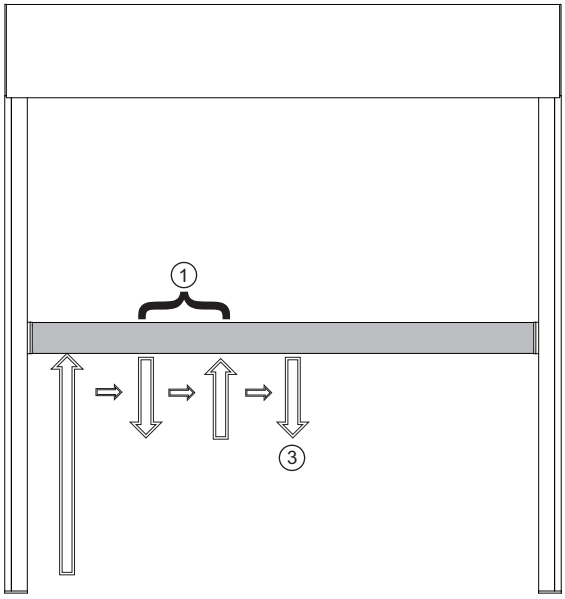

- Unit moves up
- Obstacle
- System stops and slightly moves back
- Unit moves up again
- Obstacle still present
- System stops and slightly moves back
- Unit remains in this position

Legend

① 1st repetition
② 2nd repetition
③ STOP

VENTUR GLASS



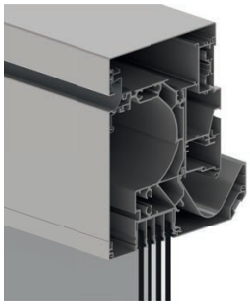

Perfect integration of the glass slide rail into the VENTUR structure, can be retrofitted at any time

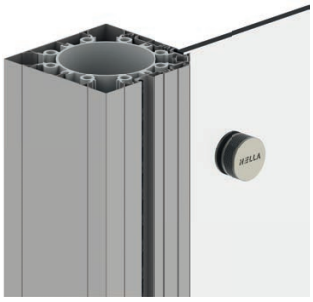

Column with grooves for seamless accommodation of sliding glass elements



Closure and lever lock optional

Limit sizes

	VENTUR GLASS
Single unit	
Minimum width [mm]	800
Maximum width [mm]	6200
Maximum height [mm] – installation complete height	2955

Scope of supply

- VENTUR GLASS integral sliding glass element
- Glazing: 10 mm Heat-soaked single-pane safety glass (ESG-H)
- Slide rail with optimally shortened running strips
- HELLA operating handle with rubber pad below
- End elements each with set-back carriage
- Carriers on both sides
- Bottom slide rail (C0 anodised), leaf profile (C0 anodised) and top slide rail (powder-coated in unit colour)
- Stop blocks for fixed leaf for screwing to top slide rail

Supplementary equipment

- Satin-finish glass
- Individual number of leaves
- Lever closure optionally with lock
- Gap seal in PVC (transparent) or aluminium (C0 anodised or powder-coated in unit colour)
- Bottom slide rail powder-coated in unit colour
- Leaf profile powder-coated in unit colour

Benefits of the product

- Protection against the cold
- Wind protection
- Rain protection
- Outdoor living

Taking of measurements

Sliding glass element on one side

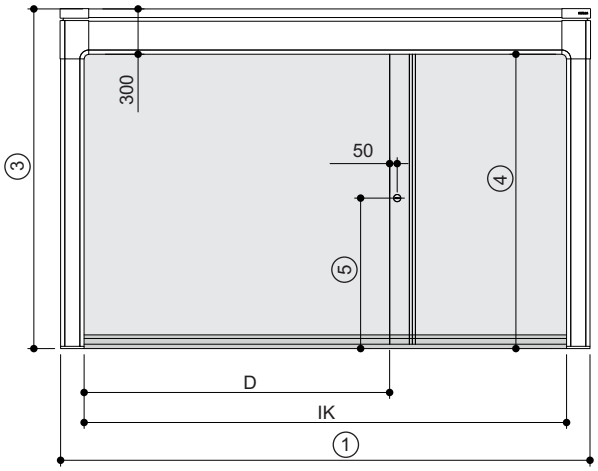

Sliding glass element on two sides

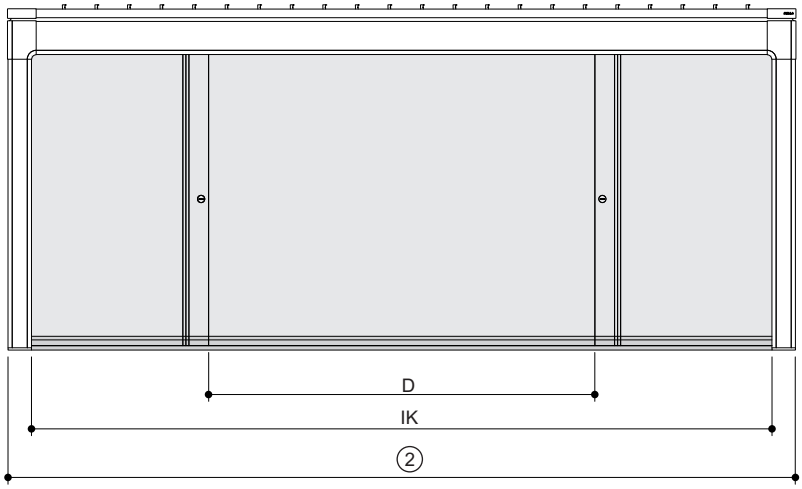

Calculation

	Width of leaf B	Passage opening D
on one side only	(IK-13)/ANZ+25	IK-77-B-13xANZ
two sides	(IK-42)/ANZ+25	IK+12-2xB-ZUSABZG

Legend

①	Complete width (outer edge - outer edge)	ZUSABZG	Additional deductions
②	Projection (outer edge - outer edge)	IK	Inner edge
③	Complete height	B	Width of leaf
④	Glass height	D	Passage opening
⑤	Height of handle	ANZ	Leaf sliding glass element, total number

Determination of additional deductions:

Number of leaves on left (L)/right (R)	Calculation
>2	13x(L/R-2)
>1	109

Notes:

- VENTUR GLASS can be installed on all four sides.
- VENTUR GLASS and VENTUR SIDE can also be combined on the same side.

VENTUR GLASS

Taking of measurements

Sliding glass elements number and distribution of leaves, opening direction

Sliding glass element on one side, 4-track, 4 leaves
Opening direction right

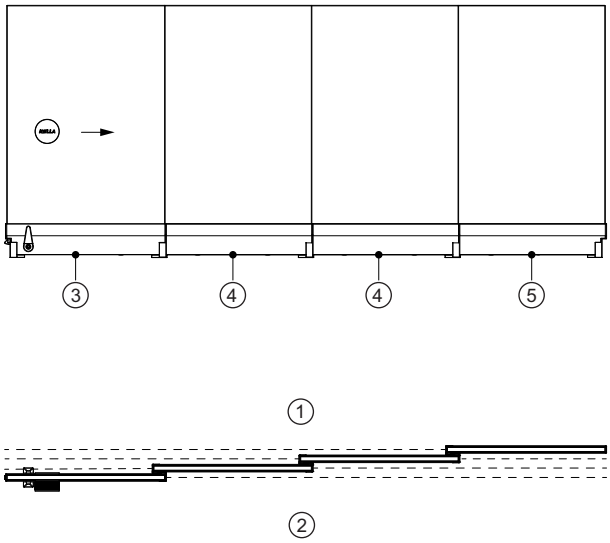

Sliding glass element on one side, 4-track, 4 leaves
Opening direction left

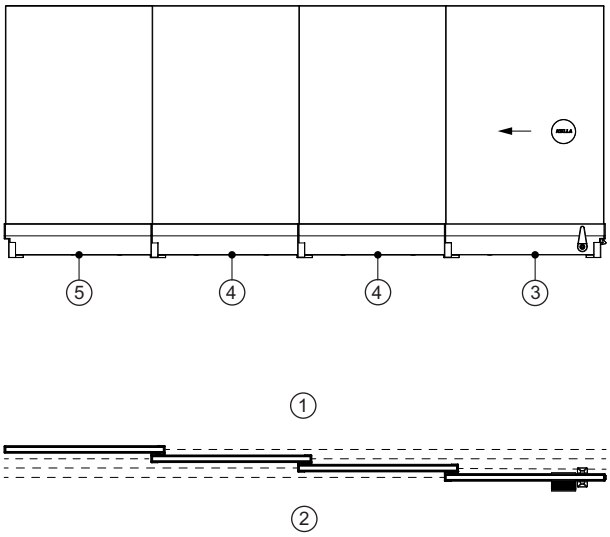

Sliding glass element on two sides, 2-track, 2 leaves
Opening direction left and 2 leaves, opening direction right

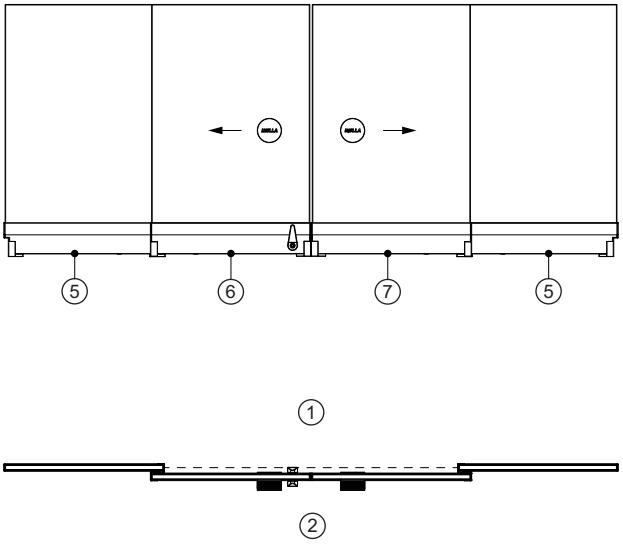

Legend

① Outside
② Interior side
③ Carriage with setback for column, with closure and handle
④ Carriage without setback, no closure
⑤ Carriage with setback for column, no closure
⑥ Carriage without setback, with closure and handle
⑦ Carriage without setback, no closure, with handle

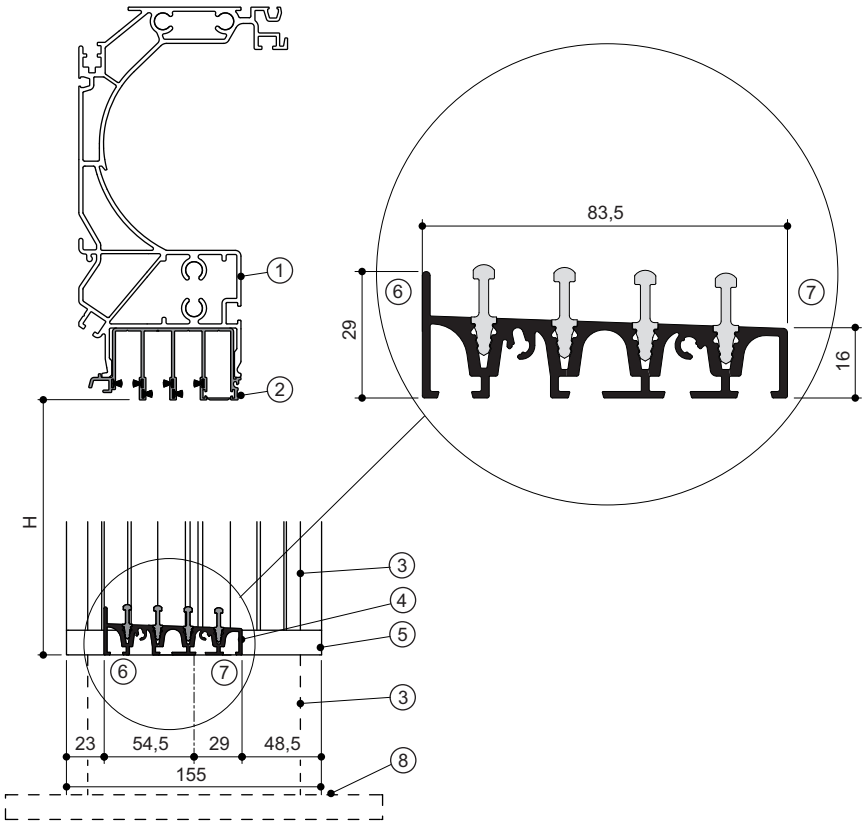

Legend

H Glass ordering height
① Basic profile
② Top slide rail 3-track or 4-track
③ Column
④ Slide rail at the bottom
⑤ Base plate type 1, 4 or end fitting for base structure
⑥ Interior side
⑦ Outside
⑧ Base plate type 1-4 for version with base structure

VENTUR GLASS

Closure

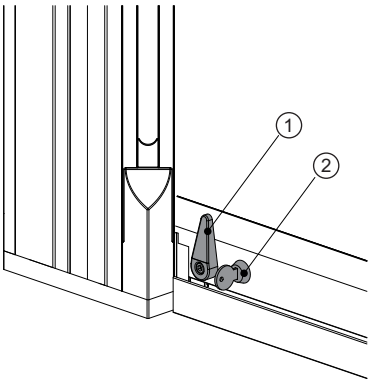

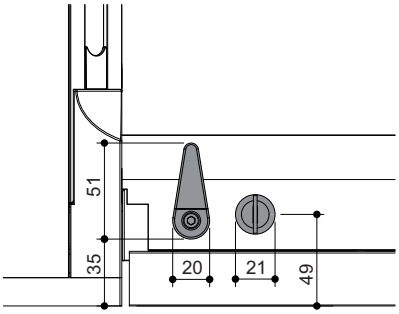

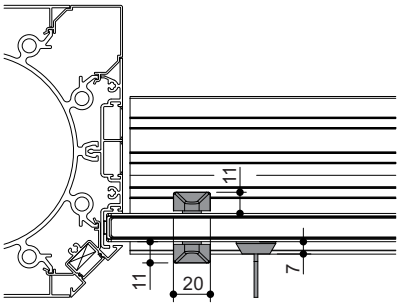

The sliding glass elements are supplied as standard with no closure mechanism. Optional lever closures are available, with or without a lock. The closure ensures that the leaves cannot be moved when closed.

Notes:

Lever closures and locks can be fitted both inside and outside in the following combinations:

- Lever inside
- Lever outside
- Lever inside and outside
- Lever inside with lock inside
- Lever outside with lock outside
- Lever inside and outside with lock outside
- Lever inside and outside with lock inside

Legend

① Lever closure
② Lock

Gap seal

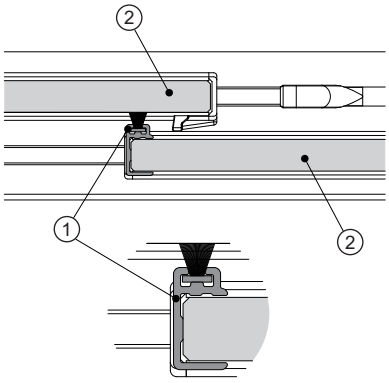

The gap seal covers or minimises the design-related gap between the glass leaves for reduced through-draughts, better protection against wind and weather and generally enhanced comfort.

Notes:

The sliding glass elements are supplied as standard with no gap seal.
The optional gap seal is available in several versions:

- transparent PVC brush retainer profile with brush strip
- aluminium brush retainer profile, anodised C0, with brush strip
- aluminium brush retainer profile, powder-coated, with brush strip

Legend

① Gap seal, PVC or aluminium
② Sliding glass element

Base plates

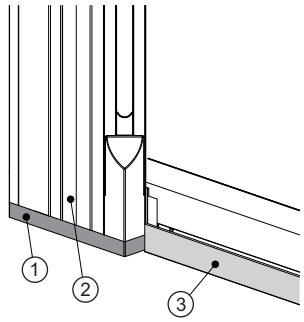

The lower sliding glass element slide rail connects flush with the column and the base plate. It is therefore important to choose a suitable base plate type and ensure it is correctly oriented.

Notes:

- Base plate type 1 possible with no restrictions
- Base plate type 2, base plate type 4 possible at the sides with no overhang. Check alignment with sliding glass element and adjust if necessary
- Base plate type 3 not possible
- All types can be used with no restrictions for versions that have a base structure

Legend

① Base plate
② Column
③ Slide rail at the bottom

Load transmission

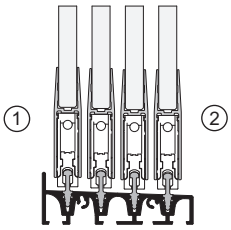

Fastening at bottom

A tested window moulding from the system supplier is installed at the bottom.

Fsd=2.18 kN/m

This force must be transferred by suitable, certified fixing materials to an adequate substrate.

Legend

① Interior side
② Outside

Mounting material

The lower slide rail must be attached to the base using the installation material provided. The recommendations regarding distances from edges and drilled hole spacings must be observed.

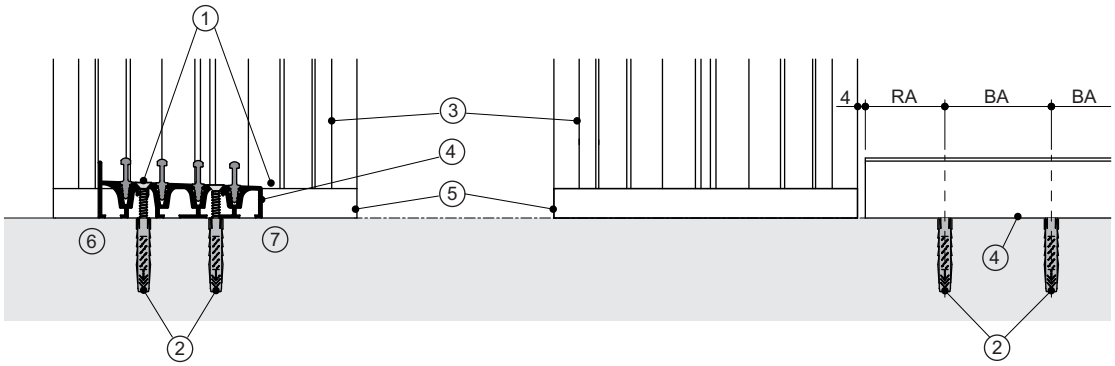

Legend

RA	Distance from edge 150 mm	④	Slide rail at the bottom
BA	Base plate drilled hole spacing 300-450 mm	⑤	Base plate type 1, 4 or end fitting for base structure
①	Countersunk screw 4.5 x 60 mm A2	⑥	Interior side
②	Dowel SX8	⑦	Outside
③	Column profile		

VENTUR GLASS

Substrate with incline

The bottom slide rails of the VENTUR GLASS must be fitted **perfectly horizontal**. Any irregularities in an inclined substrate must be levelled out by the client.

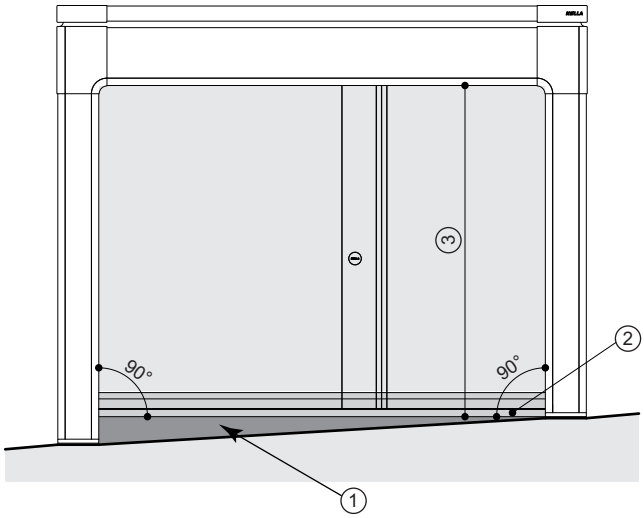

Legend

① Substrate with incline that must be evened out by the client
② Lower slide rail
③ Glass height

System information

System information for sliding glass elements (VENTUR GLASS):

- Sound insulation up to Rw=17 dB in accordance with DIN EN ISO 10140-2
- Deflection measurement Class 4 in accordance with DIN EN 12211/12210 (10 mm glass)
- Repeated pressure Class 4 in accordance with DIN EN 12211/12210 (10 mm glass)
- Safety test Class 4 in accordance with DIN EN 12211/12210 (10 mm glass)



Sliding glass elements

Sliding glass elements must always be closed gently and never forced. Avoid any use of excessive force. Take care when moving the sliding walls. Trapping hands or fingers between two sliding wall elements could result in injury.
Note: Sliding glass elements must not block emergency access and exit routes or impair their functioning.
Note: Take care of the edges of the glass elements during operation, as damage here could result in the glass breaking.
Note: The VENTUR GLASS sliding glass elements are intended solely to provide movable weather protection. They do not meet the requirements for fall protection systems or safety railings as defined in the pertinent building regulations.
A separate fall protection system conforming to the relevant standard must be provided if the installation location involves a risk of falling.
Users must never lean, sit or fall against the sliding glass elements.
The barrier effect of the glazing will be lost entirely in the event of glass breaking. This will create a risk of injury and a risk of falling.

LED lighting



Optional LED lighting can be integrated into the columns and in the inside and outside rim. Lighting is available in both traditional warm white and RGBW light.

Technical notes

Technical data:

	LED warm white	LED RGBW
Voltage	24 V DC	24 V DC
Type Power rating	7.5 W/m	RGBW=15.9 W/m R=3/G=2.1/ B=2.9/ W=7.6
Luminous flux	930 lm/m	RGBW=930 lm/m R= 95/G=255/B= 50/W=550
Color rendering index CRI	>90 Ra	>90 Ra (white)
Color temperature	2700 K	RGBW + 2700 K

Installation

Installation free-standing, flush with wall, wall

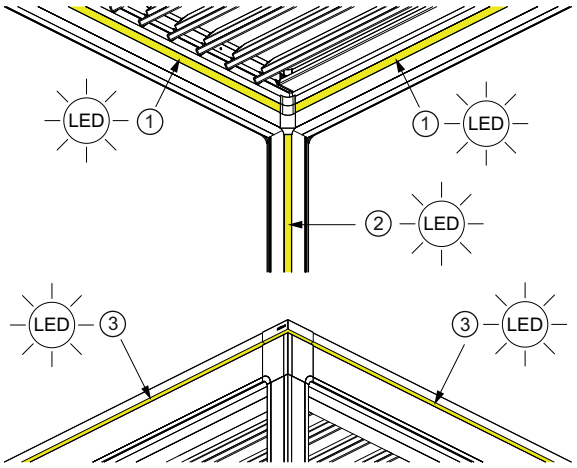

Installation FREE

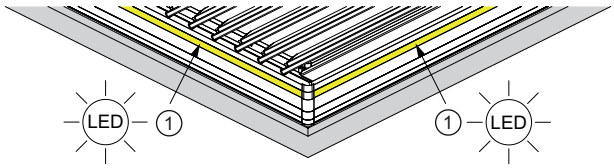

Legend

①	Direct lighting in the inside rim
②	Direct lighting in the columns
③	Indirect lighting in the outside rim

Notes:

The operation of the LED lighting (switching on/off and dimming) can be done via the multi-channel hand-held radio transmitter ONYX.CLICK or via the ONYX app.

LED lighting

Electrical data

Power supply: 230 VAC/50 Hz
Protective system: IP 54

The maximum power specifications are given for the fully equipped VENTUR ONE. The actual power capacities and current strengths depend on the specific version of the VENTUR ONE and can be calculated from the data given in the following table:

VENTUR ONE	per lin. m LEDs WHITE	per lin. m LEDs RGBW	per VENTUR SIDE ONYX	per VENTUR SIDE Somfy io
max. 168 W	max. 7.5 W/m	max. 15.9 W/m	max. 160 W	max. 170 W

Note concerning electrical installation:

- A power supply cable must not exceed the maximum load of 2990 W per phase. This must be tested by an electrically skilled person before the unit is commissioned. The power supply cable to be provided by the client must have a cross-section of 2.5 mm². If the "power sockets" option is realised, it is recommended to have a short-circuit current or loop impedance measurement carried out by an electrically skilled person.
  A protective device to be provided by the client (fuse and residual current circuit breaker rated 30 mA) and circuit breaker to disconnect the unit must be installed. A B13A+N or B13+N 3-pole miniature circuit breaker is recommended as maximum back-up fuse for the power supply cable. The device meets the EMC directives for the use in residential and commercial environments.
  The unit must be integrated in a lightning protection concept, if available. In the case of retrofitting, a possibly necessary lightning protection concept should be prepared by the professional electrician performing the electrical works. The use of an overvoltage protection device is recommended.
- We cannot guarantee for the operational reliability with non-approved modifications or improper use.

Design options:

Direct lighting in the inside rim

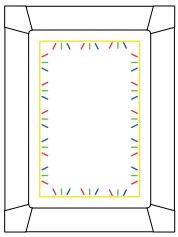

Design options:

Direct lighting in the columns

Corner column

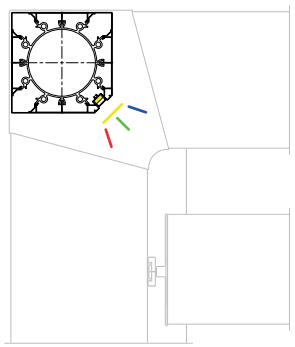

Intermediate column, column in combination

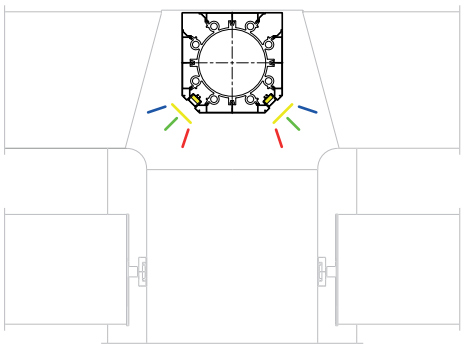

Central column

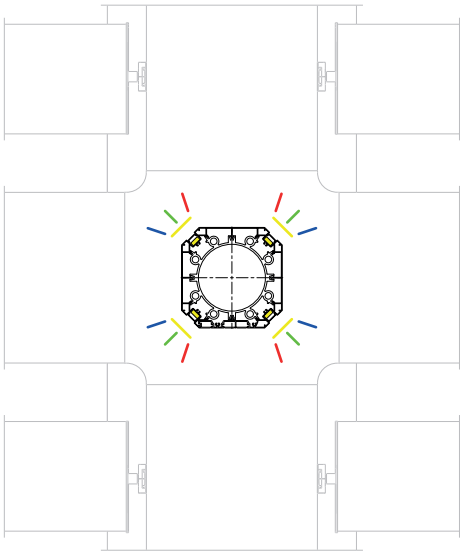

Inside corner column

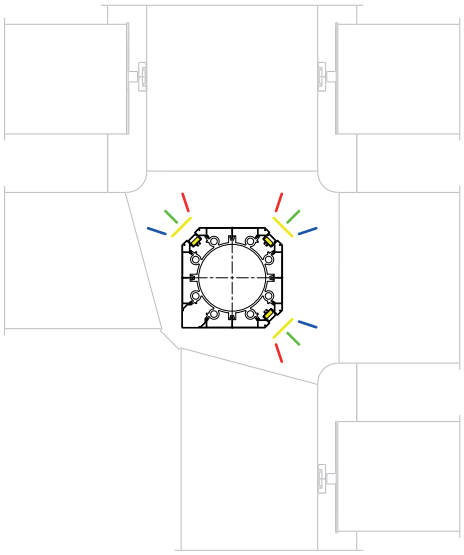

Column setback

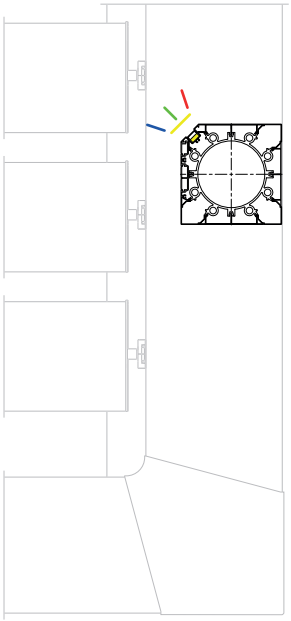

Column setback in combination

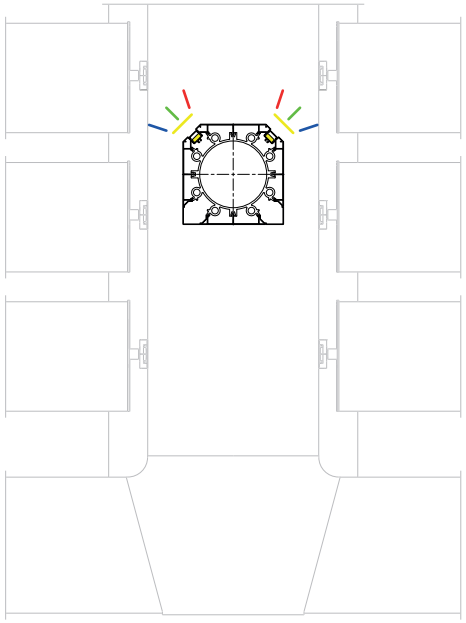

LED lighting

Design options:

Indirect lighting in the outside rim – VENTUR ONE free-standing

Basic module

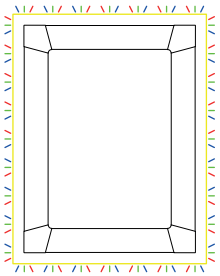

Basic module with additional module to the side

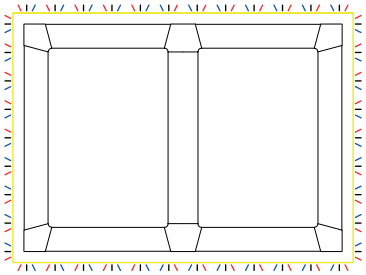

Basic module with two additional modules to the side

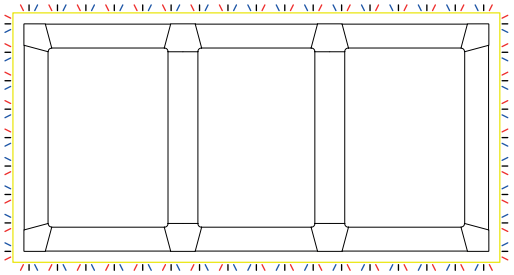

Basic module with additional modules to the side and front

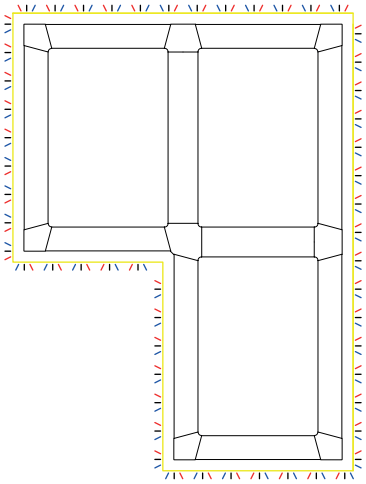

Basic module with additional module to the side with differing overhang

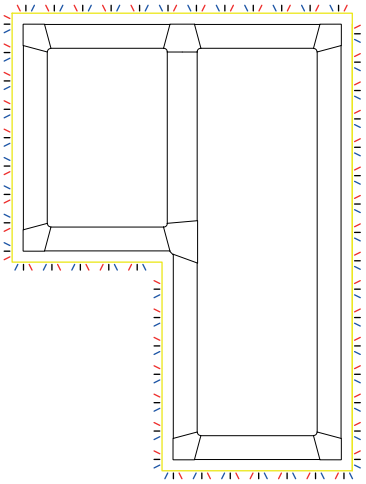

Basic module with additional modules to the side and front

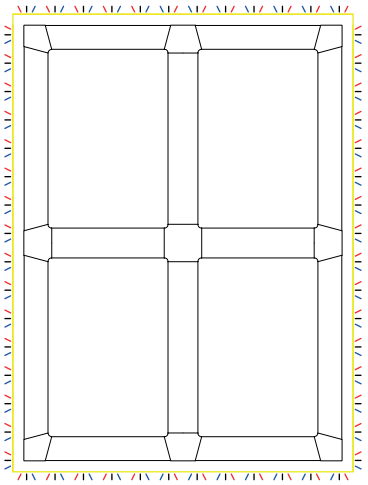

LED lighting

Design options:

Indirect lighting in the outside rim – VENTUR ONE installed flush with wall or wall-mounted

Basic module

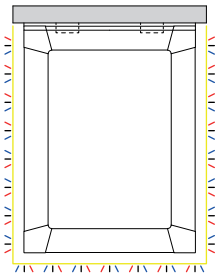

Basic module with additional module to the side

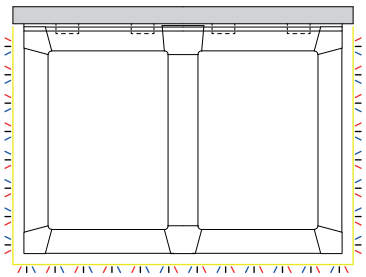

Basic module with two additional modules to the side

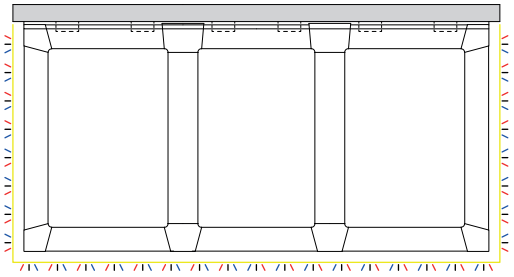

Basic module with additional modules to the side and front

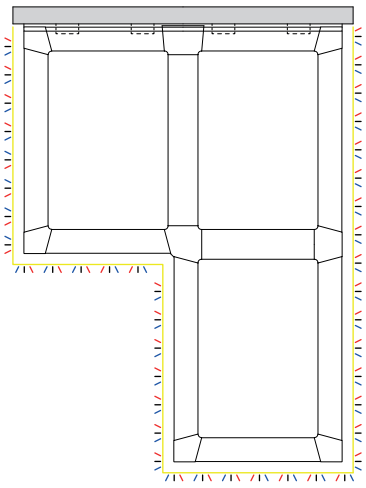

Basic module with additional module to the side with differing projection

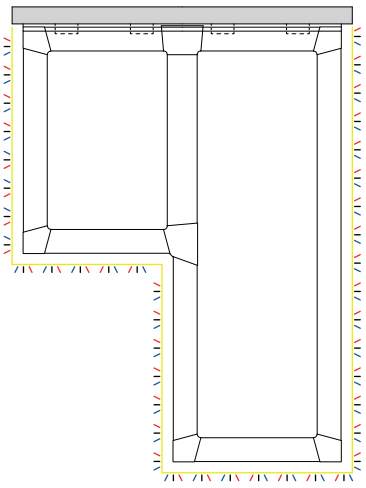

Basic module with additional modules to the side and front

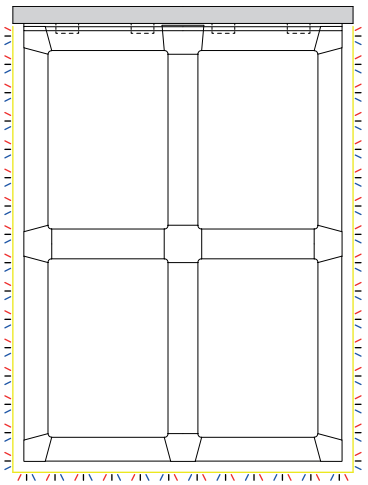

Basic module with additional module to the side with differing projection

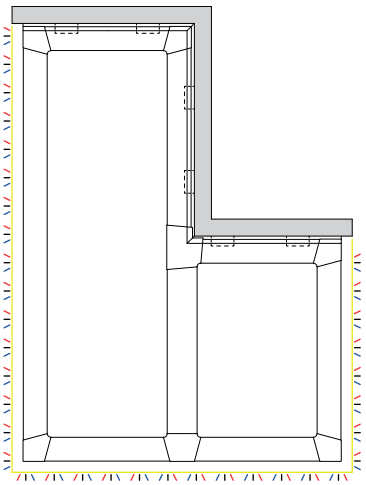

INSTALLATION TECHNIQUE

Installation surfaces

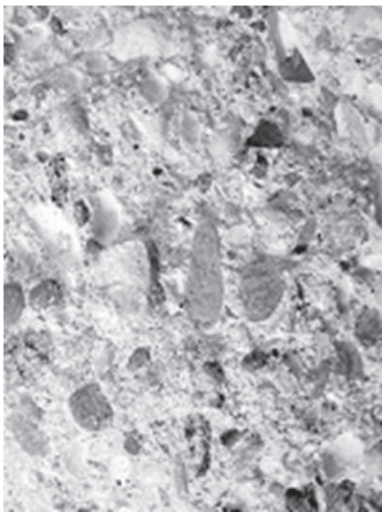

Type of installation I (installation on concrete)
Reinforced concrete is a high pressure-resistant construction material (bulk material). The figures in the abbreviated designation of the construction materials indicate the pressure-resistance. C20/C25 means, for example, that the concrete has a pressure-resistance of 25 N/mm². This is the most common resistance for concrete.
When drilling the drill slips smoothly into the solid material. In doing so grey-white drill dust rises out. The recommended type of drilling is a percussive or hammer drilling.
To brace, an anchor bolt FAZ is used (e.g. balcony view from below).



Type of installation II (installation on clay brick)
Clay brick is a pressure-resistant construction material (bulk material). These construction materials are highly suitable for fastenings, because in the majority of cases they do not have hollow spaces (bricks with a contingent of up to 15% of perforated surface, e.g. handle pockets are considered as full bricks). The clay bricks are also known as solid bricks, clinkers or bricks.
When drilling the drill slips smoothly into the solid material. In doing so red-brown drill dust becomes visible. The recommended type of drilling is percussion drilling or hammer drilling.
For bracing in clay bricks it is recommended to glue in threaded rods using an injection system.



Type of installation II (installation on sand-lime full brick)
Sand-lime full brick is a pressure-resistant construction material (bulk material). These construction materials are highly suitable for fastenings, because in the majority of cases they do not have hollow spaces (bricks with a contingent of up to 15% of perforated surface, e.g. handle pockets are considered as full bricks).
When drilling the drill slips smoothly into the solid material. In doing so white drill dust becomes visible. The recommended type of drilling is percussion drilling or hammer drilling.
For bracing in sand-lime full bricks it is recommended to glue in threaded rods using an injection system.

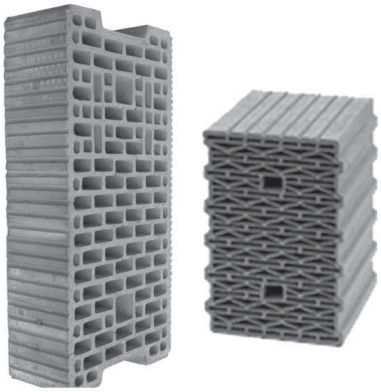

Type of installation III (installation on vertically perforated brick)
The vertically perforated brick (honeycomb brick or perforated brick) is a pressure-resistant construction material with hollow spaces. If higher weights are fixed to these bricks, a dowel with a long expanded zone should be chosen and mounted very carefully.
When drilling the drill moves forward jerkily. In doing so red-brown drill dust becomes visible. The recommended type of drilling is rotary drilling without percussion.
For bracing in vertically perforated bricks it is recommended to glue in threaded rods using an injection system.

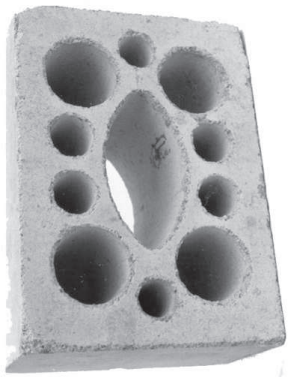

Type of installation IV (installation on sand-lime hollow brick)
Sand-lime hollow brick is a pressure-resistant construction material with hollow spaces.
When drilling the drill moves forward jerkily. In doing so white drill dust becomes visible.
The recommended type of drilling is rotary drilling without percussion.
For bracing in sand-lime hollow bricks it is recommended to glue in threaded rods using an injection system.

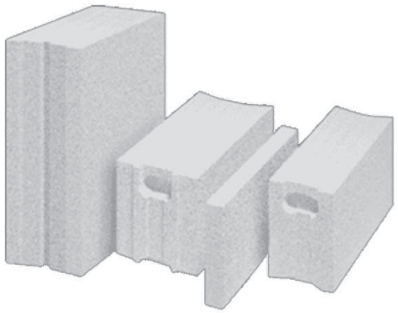

Type of installation VII (installation on cellular concrete or lightweight concrete)
Cellular concrete bricks are full bricks with a porous structure (for the most part with a lot of pores and relatively low pressure resistance). Known as Ytong, Hebel, Siporex, Durox or Greisel.
Lightweight concrete bricks are also full bricks with a porous structure (for the most part a lot of pores and relatively low pressure resistance). Known as floating brick or full brick made of swelling clay (Liapor, Leca).
When drilling the drill moves forward smoothly. In doing so white drill dust becomes visible. The recommended type of drilling is rotary drilling without percussion using a special conical drill.
For bracing in cellular concrete it is recommended to glue in threaded rods using an injection system.

Installation sets

Pergola awnings, awnings

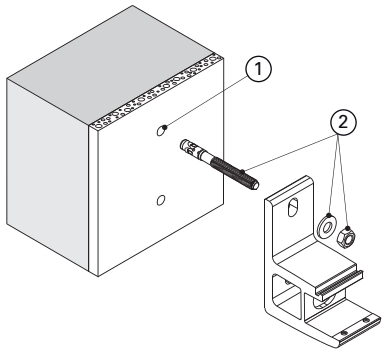

Installation set 1 A4
(for type of installation I – installation on concrete)
Design A4:
Stay bolt M12/30 mm effective length
+ large plain washer and
hexagon nut M12
Art. no. 03471536

Legend

① Pre-drilling Ø12
② Stay bolt M12/30 mm effective length + large plain washer and hexagon nut M12

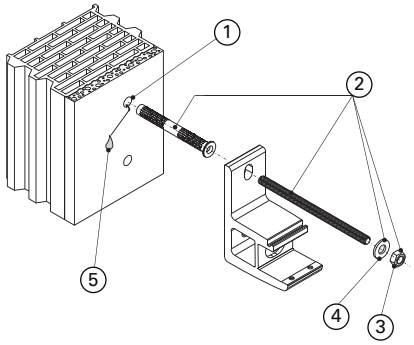

Installation set 2 A4
(for installation type II, III, IV, V, VI, VII – installation on brickwork)
Design A4 with injection anchor bolt set
Scope of delivery without injection mortar
incl. Anchor sleeve ø16x130 mm
+ threaded rod M10x160 mm
+ washer and hexagon nut M10
Art. no. 03471502

Installation set 2 A4 M
(for installation type II, III, IV, V, VI, VII – Installation on brickwork)
Design A4 with injection anchor bolt set
incl. injection mortar (1 cartridge mortar per 4 anchor sleeves)
incl. anchor sleeve Ø16x130 mm
+ threaded rod M10x160 mm
+ washer and hexagon nut M10
Art. no. 03471522

Attention: Only suitable for plaster thicknesses up to 20 mm.

Legend

① pre-drilling Ø16
② Injection anchor bolt set
③ Washer M10
④ Screw nut M10
⑤ Injection mortar FIS V Plus 360 S

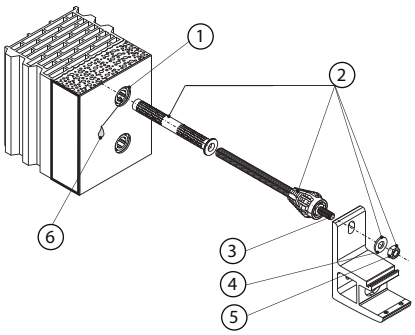

Installation set 3 A2 (for installation on brickwork)
(for installation on ETICS-thermal insulation composite system)
Design A2 with spacer stay bolt set
Delivery without injection mortar
incl. anchor sleeve
Art. no. 03471503

Installation set 3 A2 M (for installation on brickwork)
(for installation on ETICS-thermal insulation composite system)
Design A2 with spacer stay bolt set
Delivery includes injection mortar (1 cartridge mortar per 2 anchor sleeves)
incl. anchor sleeve
Art. no. 03471524
Attention: Only suitable for ETICS-thermal insulation composite system from 60 mm to 170 mm.

Legend
① pre-drilling ø20
② Thermax Set M16-12/170
③ Threaded rod M12 A2
④ Washer M12 A2
⑤ Screw nut M12 A2
⑥ Injection mortar FIS V Plus 360 S

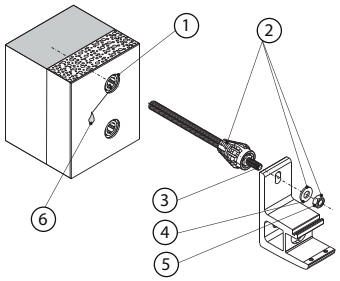

Installation set 3 B A2
for mounting base concrete (I), wood
(for installation on ETICS-thermal insulation composite system)
Design A2 with spacer stay bolt set.
Delivery without anchor sleeve and without injection mortar
Art. no. 03471535

Installation set 3 B A2 M
for mounting base concrete (I)
(for installation on ETICS-thermal insulation composite system)
Design A2 with spacer stay bolt set
without anchor sleeve
Delivery with injection mortar (1 cartridge mortar per 10 anchor rods)
Art. no. 03471525
Attention: Only suitable for ETICS-thermal insulation composite system from 60 mm to 220 mm.

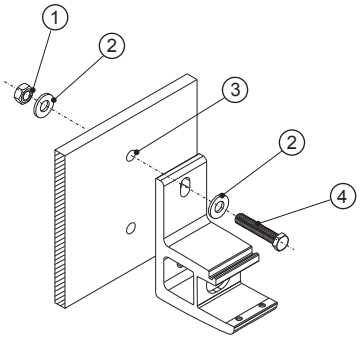

Installation set 4 A2
(for installation on metal)
Design A2 with hexagon screw set
Art. no. 03471504

Legend
① Screw nut M12 A2
② Washer M12 A2
③ pre-drilling Ø13
④ Hexagon head bolt M12x45 A2

Installation sets

Pergola awnings, awnings

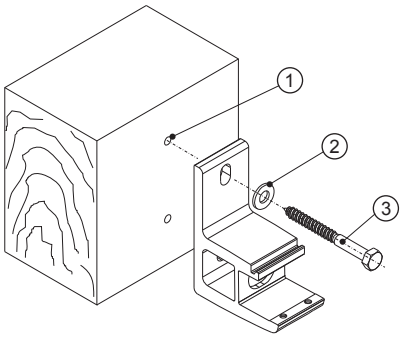

Installation set 5 A2
(for installation on wood)
Design A2 with hexagon wood screw set
Art. no. 03471505

Installation set 5 VZ
(for installation on wood)
Galvanized design with hexagon wood screw set
Art. no. 03471518

Legend

① pre-drilling ø9
② Washer M12
③ Hexagon wood screw ø12x120

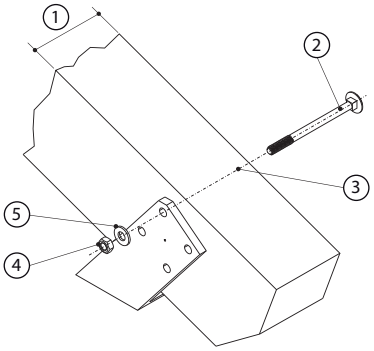

Length = rafter thickness + 23 mm

Installation set 6 A2
(for installation on rafters)
Design A2 with saucer-head screw set with rafter thicknesses:
78-97 mm ø12x120
Art. no. 03471506

89-107 mm ø12x130
Art. no. 03471507

108-117 mm ø12x140
Art. no. 03471508

118-127 mm ø12x150
Art. no. 03471509

128-137 mm ø12x160
Art. no. 03471510

138-157 mm ø12x180
Art. no. 03471511

158-177 mm ø12x200
Art. no. 03471512

178-197 mm ø12x220
Art. no. 03471513

Legend

① Rafter thickness
② Saucer-head screw M12 A2 with square neck
③ Pre-drilling Ø13
④ Screw nut M12
⑤ Washer M12

Awnings

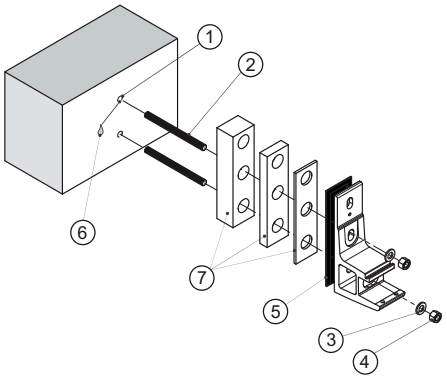

Installation set 7 A4
(for installation on concrete ceiling face on ETICS-thermal insulation composite system)
Design A4 with injection anchor bolt set
Scope of delivery without injection mortar
+ threaded rod
+ washer and hexagon nut M12

50 mm ETICS
Art. no. 03471538
60 mm ETICS
Art. no. 03471539
80 mm ETICS
Art. no. 03471540
100 mm ETICS
Art. no. 03471541
120 mm ETICS
Art. no. 03471542
140 mm ETICS
Art. no. 03471543
160 mm ETICS
Art. no. 03471544
180 mm ETICS
Art. no. 03471545
200 mm ETICS
Art. no. 03471546

Installation set 7 A4 M
(for installation on concrete ceiling face on ETICS-thermal insulation composite system)
Design A4 with injection anchor bolt set
Scope of delivery with injection mortar
+ threaded rod
+ washer and hexagon nut M12

50 mm ETICS
Art. no. 03471547
60 mm ETICS
Art. no. 03471548
80 mm ETICS
Art. no. 03471549
100 mm ETICS
Art. no. 03471550
120 mm ETICS
Art. no. 03471551
140 mm ETICS
Art. no. 03471552
160 mm ETICS
Art. no. 03471553
180 mm ETICS
Art. no. 03471554
200 mm ETICS
Art. no. 03471555

Legend
① pre-drilling ø14
② Anchor rod FIS A M12
③ Washer M12 A4
④ Nut M12 A4
⑤ Bitumen band
⑥ Injection mortar FIS SB 390S
⑦ Wood distances

Notes:
- including sealing glue
- 140 mm anchoring depth
- Observe minimum edge distances pursuant to approval ETA-12/0258.
- Installation set only available for awnings AREIA 6030, AREIA 7040 and VIVA 7040.

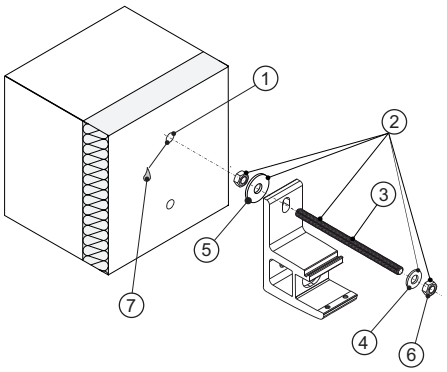

Installation set 8 A4
(for installation on concrete with ETICS-thermal insulation composite system of up to 60 mm)
Design A4 with injection anchor bolt set
Scope of delivery without injection mortar
+ threaded rod
+ washer and hexagon nut M12
Art.-No. 03471556

Installation set 8 A4 M
(for installation on concrete with ETICS-thermal insulation composite system of up to 60 mm)
Design A4 with injection anchor bolt set
Scope of delivery with injection mortar
+ threaded rod
+ washer and hexagon nut M12
Art.-No. 03471557

Legend
① pre-drilling ø14
② Installation set 8
③ Anchor rod FIS A M12
④ Washer M12 A4 ø24
⑤ Washer M12 A4 ø37
⑥ Nut M12 A4
⑦ Injection mortar FIS V Plus 360 S

Installation sets

Awnings

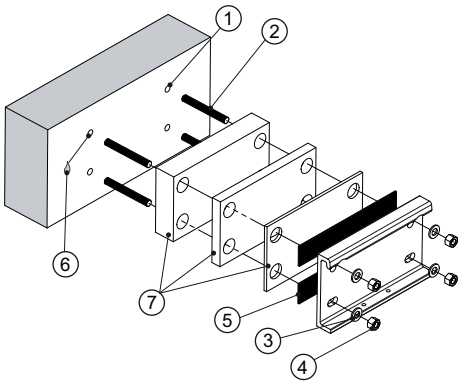

Installation set 9 A4
(for installation on concrete ceiling face on ETICS-thermal insulation composite system)
Design A4 with injection anchor bolt set
Scope of delivery without injection mortar
+ threaded rod
+ washer and hexagon nut M12

50 mm ETICS
Art. no. 03631501
60 mm ETICS
Art. no. 03631502
80 mm ETICS
Art. no. 03631503
100 mm ETICS
Art. no. 03631504
120 mm ETICS
Art. no. 03631505
140 mm ETICS
Art. no. 03631506
160 mm ETICS
Art. no. 03631507
180 mm ETICS
Art. no. 03631508
200 mm ETICS
Art. no. 03631509

Installation set 9 A4 M
(for installation on concrete ceiling face on ETICS-thermal insulation composite system)
Design A4 with injection anchor bolt set
Scope of delivery with injection mortar
+ threaded rod
+ washer and hexagon nut M12

50 mm ETICS
Art. no. 03631510
60 mm ETICS
Art. no. 03631511
80 mm ETICS
Art. no. 03631512
100 mm ETICS
Art. no. 03631513
120 mm ETICS
Art. no. 03631514
140 mm ETICS
Art. no. 03631515
160 mm ETICS
Art. no. 03631516
180 mm ETICS
Art. no. 03631517
200 mm ETICS
Art. no. 03631518

Legend

① pre-drilling ø14
② Anchor rod FIS A M12
③ Washer M12 A4
④ Nut M12 A4
⑤ Bitumen band
⑥ Injection mortar FIS SB 390S
⑦ Wood distances

Notes:

- incl. sealing glue
- 140 mm anchoring depth
- Observe minimum edge distances pursuant to approval ETA-12/0258.
- Installation set only available for awnings CLEO 7030 and CLEO 7040.

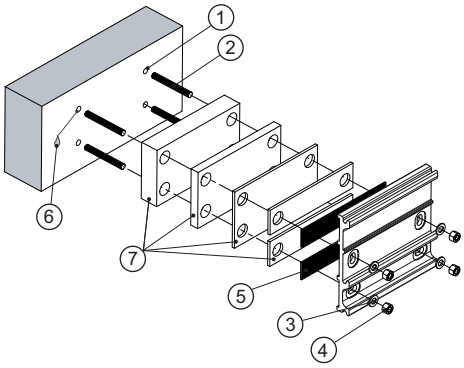

Installation set 10 A4
(for installation on concrete ceiling face on ETICS-thermal insulation composite system)
Design A4 with injection anchor bolt set
Scope of delivery without injection mortar
+ threaded rod
+ washer and hexagon nut M12

50 mm ETICS
Art. no. 03651501
60 mm ETICS
Art. no. 03651502
80 mm ETICS
Art. no. 03651503
100 mm ETICS
Art. no. 03651504
120 mm ETICS
Art. no. 03651505
140 mm ETICS
Art. no. 03651506
160 mm ETICS
Art. no. 03651507
180 mm ETICS
Art. no. 03651508
200 mm ETICS
Art. no. 03651509

Installation set 10 A4 M
(for installation on concrete ceiling face on ETICS-thermal insulation composite system)
Design A4 with injection anchor bolt set
Scope of delivery with injection mortar
+ threaded rod
+ washer and hexagon nut M12

50 mm ETICS
Art. no. 03651510
60 mm ETICS
Art. no. 03651511
80 mm ETICS
Art. no. 03651512
100 mm ETICS
Art. no. 03651513
120 mm ETICS
Art. no. 03651514
140 mm ETICS
Art. no. 03651515
160 mm ETICS
Art. no. 03651516
180 mm ETICS
Art. no. 03651517
200 mm ETICS
Art. no. 03651518

Legend

① pre-drilling ø14
② Anchor rod FIS A M12
③ Washer M12 A4
④ Nut M12 A4
⑤ Bitumen band
⑥ Injection mortar FIS SB 390S
⑦ Wood distances

Notes:

- incl. sealing glue
- 140 mm anchoring depth
- Observe minimum edge distances pursuant to approval ETA-12/0258.
- Installation set only available for awning PAN 7040.

Installation sets

Over-glass/under-glass awnings

For installation on aluminium constructions

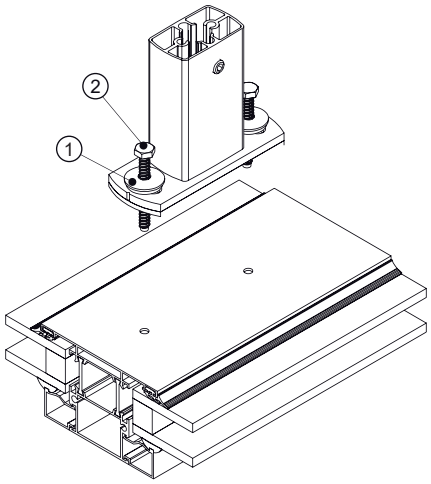

Installation set	art. no.
A/50	041005U1
A/80	041005U2
A/90	041005U3
A/100	041005U4

Legend

① E-Jot sealing washer
② E-Jot screw ø6.3 A2 L=50(80/90/100)

For installation on wooden constructions

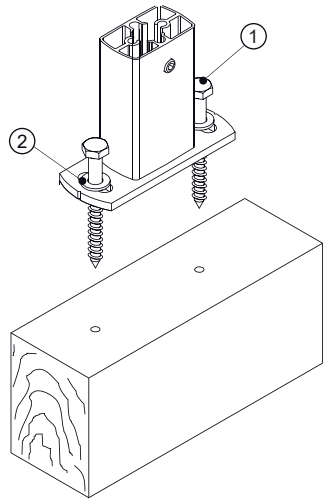

Installation set	art. no.
B	041005U5

Legend

① Hexagon wood screw ø8 x 80
② Washer M8

For installation on brickwork or concrete
Note: Mounting bracket has to be ordered separately.

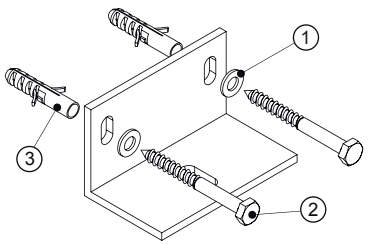

Installation kit	art. no.
D	041005U9

Legend

① Washer M8
② Hexagon wood screw ø8x80
③ Universal dowel ø10

For installation on aluminium constructions

Aluminium post-and-beam construction
with hanger bolt

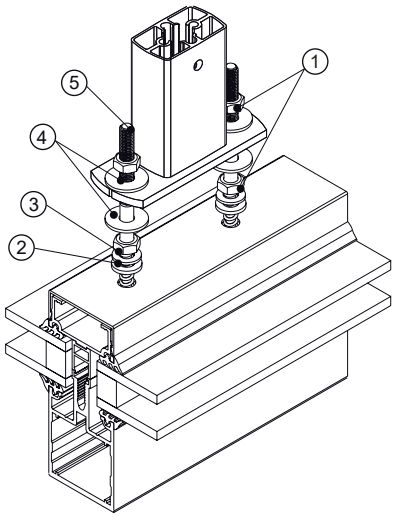

Installation set	art. no.
C/100	041005U6
C/130	041005U7
C/200	041005U8

Legend

① Screw nut M8
② Sealing washer for M8
③ Washer M8
④ Washer M8 large
⑤ Hanger bolt M8 A2 L=100/130/200

Wood-aluminium construction

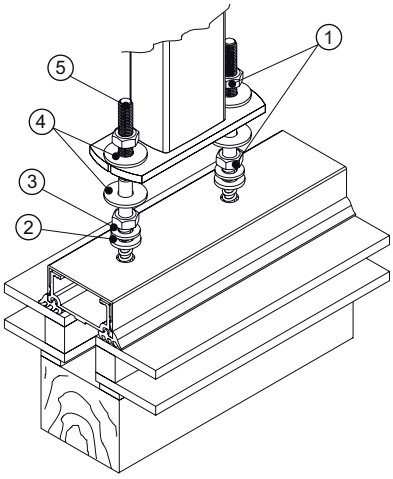

Aluminium post-and-beam construction
with threaded rod

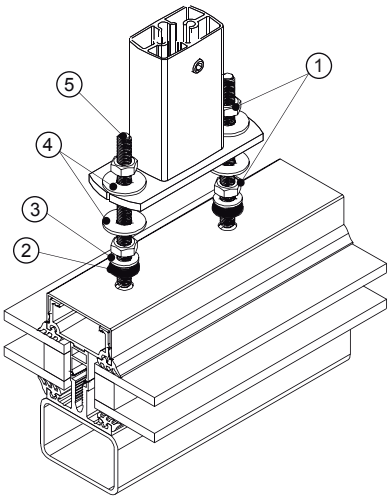

Installation kit	art. no.
E/100	041005V1
E/150	041005V2

Legend

① Screw nut M8
② Sealing washer for M8
③ Washer M8
④ Washer M8 large
⑤ Threaded rod M8 L = 100/150

Installation sets

Over-glass/under-glass awnings

For installation with M8 threaded bolt provided by the customer

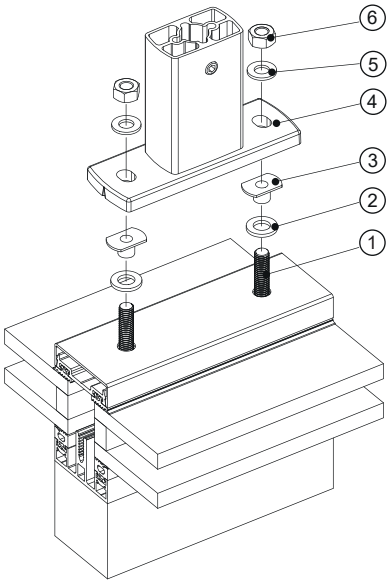

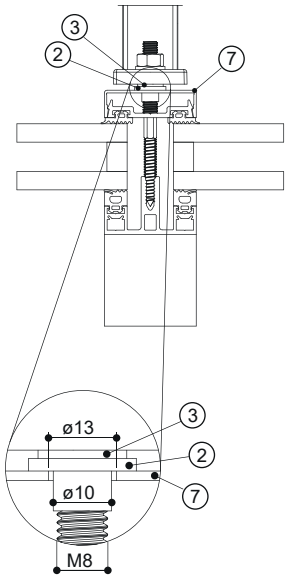

Installation set	art. no.
I	08031506

Legend

① Threaded bolt M8 provided by the customer
② Sealing washer
③ it has to be taken into account
④ Guide rail holding device
⑤ Washer M8
⑥ Hexagon nut M8
⑦ Covering shell

Pergolas, slat roofs

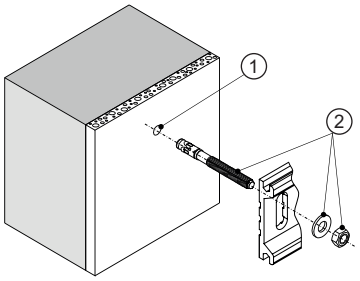

Installation set 1 A4
(for type of installation I – installation on concrete)
Design A4:
Stay bolt M12/30 mm effective length
+ large plain washer and
hexagon nut M12

Art. no. 03471536

Exception for VENTUR floor console type 1: Stay bolt M12/60 mm effective length + large plain washer and hexagon nut M12

Legend

① Pre-drilling Ø12
② Stay bolt M12/30 mm effective length + large plain washer and hexagon nut M12

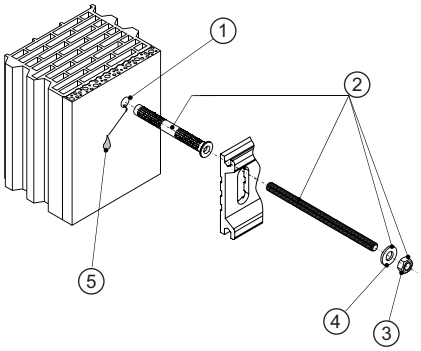

Attention: Only suitable for plaster thicknesses up to 20 mm.

Installation set 2 A4
(for mounting base II, III, IV, V, VI, VII – installation on brickwork)
Design A4 with injection anchor bolt set
Scope of delivery without injection mortar
incl. Anchor sleeve ø16x130 mm
+ threaded rod M10x150 mm
+ washer and hexagon nut M10

Art. no. 03471502

Installation set 2 A4 M
(for mounting base II, III, IV, V, VI, VII – installation on brickwork)
Design A4 with injection anchor bolt set
incl. injection mortar (1 cartridge mortar per 4 anchor sleeves)
incl. anchor sleeve Ø16x130 mm
+ threaded rod M10x150 mm
+ washer and hexagon nut M10

Art. no. 03471522

Legend

① pre-drilling Ø16
② Injection anchor bolt set
③ Washer M10
④ Screw nut M10
⑤ Injection mortar FIS V Plus 360 S

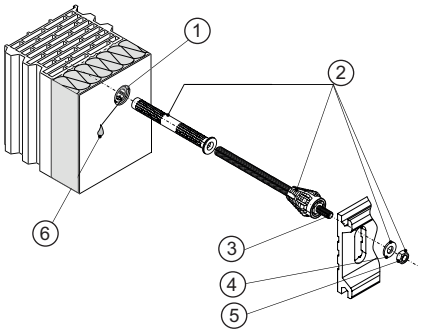

Installation set 3 A2
(for installation on ETICS-thermal insulation composite system)
Design A2 with spacer stay bolt set
Injection mortar is not included in the delivery.
incl. anchor sleeve
Art. no. 03471503

Installation set 3 A2 M
(for installation on ETICS-thermal insulation composite system)
Design A2 with spacer stay bolt set
Delivery includes injection mortar (1 cartridge mortar per 3 anchor sleeves)
incl. anchor sleeve
Art. no. 03471524
Attention: Only suitable for ETICS-thermal insulation composite system from 60 mm to 170 mm, when used with anchor sleeve (brickwork).

Legend

① pre-drilling ø20
② Thermax Set M16-12/170
③ Threaded rod M12 A2
④ Washer M12 A2
⑤ Screw nut M12 A2
⑥ Injection mortar FIS V Plus 360 S

Installation set 3 B A2
for mounting base concrete (I)
(for installation on ETICS-thermal insulation composite system)
Design A2 with spacer stay bolt set.
Delivery without anchor sleeve and without injection mortar
Art. no. 03471535

Installation set 3 B A2 M
for mounting base concrete (I)
(for installation on ETICS-thermal insulation composite system)
Design A2 with spacer stay bolt set without anchor sleeve
Delivery with injection mortar (1 cartridge mortar per 4 anchor sleeves)
Art. no. 03471525
Attention: Only suitable for ETICS-thermal insulation composite system from 60 mm to 200 mm.

Installation sets

Pergolas, slat roofs

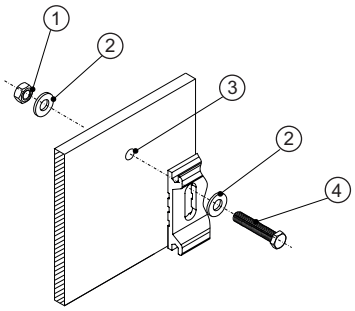

Installation set 4 A2(for installation on metal) Design A2 with hexagon head screw set
Art. no. 03471504

Legend

① Screw nut M12 A2
② Washer M12 A2
③ pre-drilling Ø13
④ Hexagon head bolt M12x45 A2

Pergolas

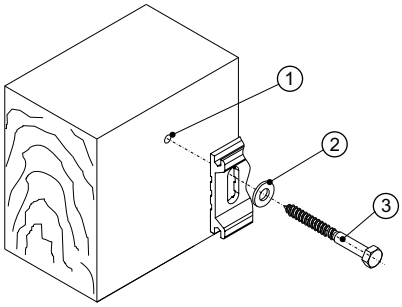

Installation set 5 A2
(for installation on wood)
Design A2 with hexagonal wood screw set
Art. no. 03471505

Legend

① pre-drilling ø9
② Washer M12
③ Hexagon wood screw ø12x120

Slat roofs

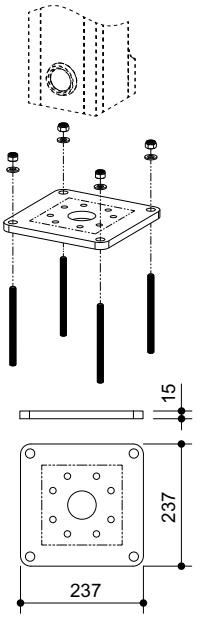

Installation set 11 A2
(for installation type I – installation on concrete)
Version A2 with injection anchor bolt set
Scope of supply without injection mortar
+ threaded rod M12x200
+ washer ø12 mm
+ lock nut

Art. no. 10211502

Note: Only suitable for base plate types 3 and 4

Installation set 11 A2 M
(for installation type I – installation on concrete)
Version A2 with injection anchor bolt set
Scope of supply with injection mortar
+ threaded rod M12x200 mm
+ washer ø12 mm
+ lock nut
+ injection mortar FIS SB

Art. no. 10211501

Note: Only suitable for base plate types 3 and 4

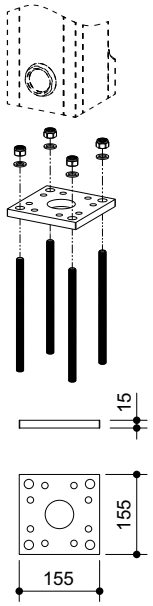

Installation set 12 A2
(for installation type I – installation on concrete)
Version A2 with injection anchor bolt set
Scope of supply without injection mortar
+ threaded rod M14x250 mm
+ washer ø14 mm
+ lock nut M14

Art. no. 10211504

Note: Only suitable for base plate types 1 and 2

Installation set 12 A2 M
(for installation type I – installation on concrete)
Version A2 with injection anchor bolt set
Scope of supply with injection mortar
+ threaded rod M14x250 mm
+ washer ø14 mm
+ lock nut M14
+ injection mortar FIS SB 390S

Art. no. 10211503

Note: Only suitable for base plate types 1 and 2

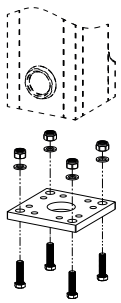

Installation set 13 A2
(for installation type on metal)
Version A2 with hexagon head screw set
+ hexagon head screw M12x45 mm
+ washer ø12 mm
+ lock nut M12

Art. no. 10211505

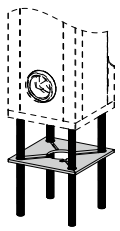

Support plate for base plate type 1
for visible spacing of the column from the installation base
Material: Aluminium powder-coated

Thickness 1 mm: Art. no. 10211706
Thickness 3 mm: Art. no. 10211707
Thickness 5 mm: Art. no. 10211708

Installation sets

Pergolas

Heavy-duty bracket 160x110mm (for installation on concrete with ETICS)

Heavy-duty bracket - thick layer passivated and powder-coated; all screws A2

Art. no.	Description
10200559	125-160 mm ETICS
10200560	165-240 mm ETICS

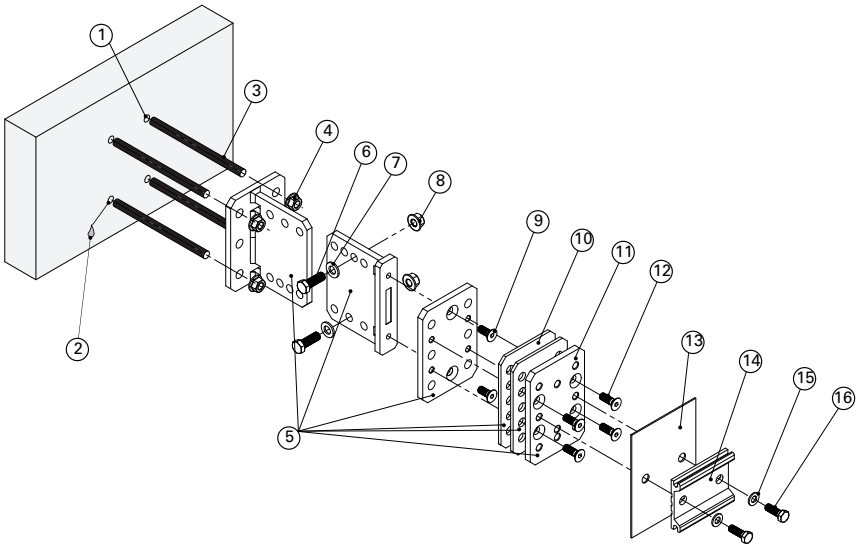

Legend

① pre-drilling Ø12
② Injection mortar FIS V Plus 360 S
③ Anchor rod M12
④ Hexagon flange nut
⑤ Heavy-duty bracket parts
⑥ Hexagon screw M12
⑦ Plain washer
⑧ Hexagon flange nut
⑨ Countersunk screw M10
⑩ Spacer plate
⑪ Base plate at the front
⑫ Countersunk screw M10
⑬ End plate
⑭ Bracket
⑮ Plain washer
⑯ Hexagon screw M10

Cover plate and bracket not included in the installation set!

Cover plate and bracket - SINTESI

Art. no.	Description
16010537	Cover plate for heavy-duty bracket
16010536	Wall bracket type I

Cover plate and bracket - VENTUR

Art. no.	Description
10200574	Cover plate for heavy-duty bracket
10200311	Wall bracket Type A

Notes:

- Please note the maximum snow and wind loads for wall mounting with heavy-duty bracket and wall bracket type A.
- Further details can be found in the technical section in the snow/ and wind load tables.

Heavy-duty bracket 160x260mm (for installation on concrete with ETICS)

Heavy-duty bracket - thick layer passivated and powder-coated; all screws A2

Art. no.	Description
10200562	125-160 mm ETICS
10200563	165-240 mm ETICS

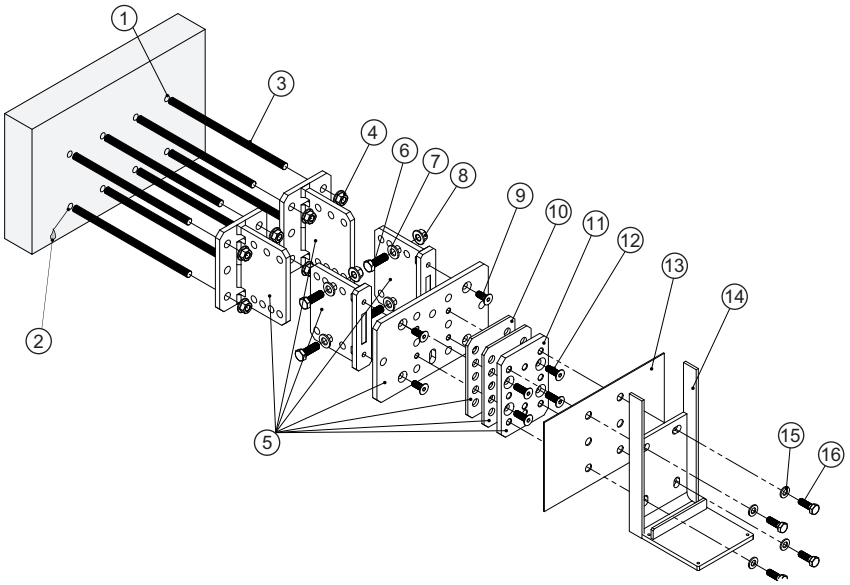

Legend

① pre-drilling Ø12
② Injection mortar FIS V Plus 360 S
③ Anchor rod M12
④ Hexagon flange nut
⑤ Heavy-duty bracket parts
⑥ Hexagon screw M12
⑦ Plain washer
⑧ Hexagon flange nut
⑨ Countersunk screw M10
⑩ Spacer plate
⑪ Base plate at the front
⑫ Countersunk screw M10
⑬ End plate
⑭ Bracket
⑮ Plain washer
⑯ Hexagon screw M10

Cover plate and bracket not included in the installation set!

Cover plate and bracket - VENTUR

Art. no.	Description
10200575	Cover plate for heavy-duty bracket
10200311	Wall bracket Type A

Notes:

- Please note the maximum snow and wind loads for wall mounting with heavy-duty bracket and wall bracket type A.
- Further details can be found in the technical section in the snow/ and wind load tables.

CONTROL DEVICES ACCESSORIES

Radio system HELLA ONYX SMART HOME

Radio transmitter

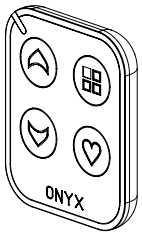

Hand-held radio transmitter ONYX.CLICK

to control one or more ONYX control device(s), with 5 channels, 5 devices per channel at a maximum; with ONYX.CENTER the number of devices per channel is not limited

Length x width x height: 56x45x10,8 mm

50680501

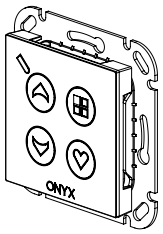

Wall-mounted radio transmitter ONYX.SWITCH

to control one or more ONYX control devices, with 5 channels, 5 devices per channel at a maximum; with ONYX.CENTER the number of devices per channel is not limited, without frame, compatible with all standard 55 frames

Length x width x height: 55x55x9,5 mm

50680601

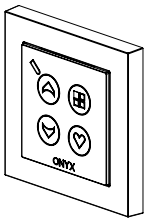

Wall-mounted radio transmitter ONYX.SWITCH

to control one or more ONYX control devices, with 5 channels, 5 devices per channel at a maximum; with ONYX.CENTER the number of devices per channel is not limited, with frame

EDV model: SWITCH Pure white

Accessories

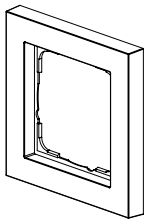

Plastic frame

suitable for ONYX.SWITCH wall-mounted radio transmitter , pure white, grey or black

05140130

Receiver

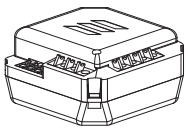

Control device ONYX.NODE

is controlled via radio with hand-held radio transmitters and wall-mounted radio transmitters and/or Gateway only suitable for the interior, connecting a pushbutton is possible, necessary per drive

Length x width x height: 49x49x24,5 mm

50680002

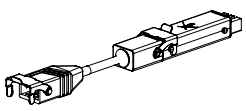

Adapter plug ONYX.CONNECTOR

is plugged between the power supply and the motor; is controlled via radio with hand-held radio transmitters and wall-mounted radio transmitters and/or Gateway, suitable for the exterior, necessary per drive

Length x width x height: Dimension 132x29x24 mm

50680302

Sensors

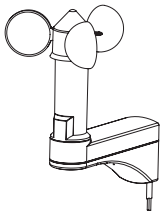

Wind/sun sensor ONYX.WEATHER

Weather sensor with wind and sun sensor; controls the entire sun protection unit automatically and weather-dependent

Length x width x height: Dimension 180x100x180 mm

50680202

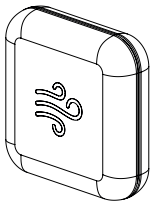

3D Wind sensor ONYX.TAG wind

Radio 3D wind sensor, for awning drop profile, battery-operated, pure white or black

Length x width x height: Dimension 40x40x12 mm

50680701

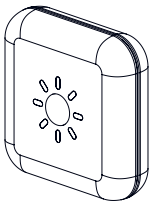

Brightness sensor ONYX.TAG sun

Radio, sun and brightness sensor, controls the entire sun protection system automatically and depending on the brightness, black

Length x width x height: Dimension 40x40x12 mm

50680711

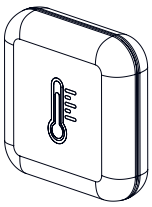

Temperature sensor ONYX.TAG temperature

Radio, temperature and humidity sensor, controls the entire sun protection system automatically and depending on the temperature, black

Length x width x height: Dimension 40x40x12 mm

50680721

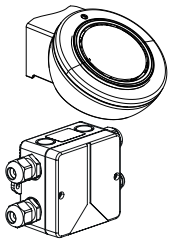

ONYX control unit with rain sensor

ONYX control unit (in surface box), controls the entire sun protection systems automatically and depending on precipitation, incl. external precipitation sensor with 2.5m cable, incl. mounting material (2 fillister head screws 4x35 mm + 2 dowel SX6)

Length x width x height of the control unit: Dimension 157x94x57 mm
Length x width x height of the precipitation sensor: Dimension 115x100x85 mm

05200114

Central controls



Gateway ONYX.CENTER

serves as interface between the smart phone and the individual control devices, forwards radio commands bi-directionally, also in combination with all other ONYX hand-held radio transmitters/wall-mounted radio transmitters

Length x width x height: 78x78x13.6 mm

50680103

Radio system io – Somfy

Pergola radio system io - Somfy

Bidirectional

The io-technology works bi-directional. This means, that radio transmitter and receiver communicate together. Thus the user knows, if the command has been executed. Furthermore the io-technology offers an increased security level.

Intelligent

The response function informs you about the execution of the commands and current status of the system at any time. Even if you are on the way, you know that everything at home is in order.

Perfectly secured

Every installation has its own security code. This is the perfect protection against unauthorized access and the stealing of data.

Radio system io – Somfy: Additional functions and sensors SINTESI

Wind sensor only

Connecting a wireless wind sensor to the SINTESI as well as to the TERRA SIDE is possible, too. Sensor required: Somfy Eolis WireFree io - Art.-No. 05200030 (battery-powered). When using one wind sensor for both units (SINTESI: blind and TERRA SIDE), the wind force must be adjusted to the maximum load capacity of the TERRA SIDE.

Precipitation sensor

If a precipitation sensor is required, the Ondeis 230V (art. no. 05200035) must be used. Using this sensor combination, the vertical blinds can be controlled simultaneously. In addition it is possible to choose between the modes safety and comfort with the help of a slide switch, which is provided at the wind sensor:

- **Safety:** The wind sensor retracts the blind of the SINTESI and the TERRA SIDE moves upwards - priority function, cannot be overridden manually. The precipitation sensor retracts the blind of the SINTESI and the TERRA SIDE moves upwards - priority function, cannot be overridden manually.
- **Comfort:** Wind sensor – as for safety. The precipitation sensor retracts the blind of the SINTESI and the TERRA SIDE moves upwards - comfort function, can be overridden manually;

Sun sensor

Connecting a sun sensor to the SINTESI as well as to the TERRA SIDE is possible, too. Sensor required: Sunteis solar-powered wireless sensor - art. no. 05200096. The sun sensor is only possible with the Somfy Tahoma Switch or Connexoon io control components. If using the Sunteis solar-powered wireless sensor with TERRA SIDE, a hand-held transmitter with automatic sun protection (for example Situo 5 Variation A/M io - art. no. 05140104) will be required.

Temperature sensor

Connecting a temperature sensor to the SINTESI as well as to the TERRA SIDE is possible, too. Sensor required: Sunteis solar-powered wireless sensor - art. no. 05200096. The temperature sensor is only possible with the Somfy Tahoma Switch control component.

General Note

If multiple sensors are to be taught-in in the pergola, the io control processes the following priority sequence:

1. Wind sensor
2. Precipitation sensor
3. Temperature and sun sensor (comfort sensors with lowest priority)

The temperature and sun sensors are comfort sensors with the lowest priority. They can be used to create scenarios via the Tahomabox, for example. Example: If temperature x and sun value y are exceeded, the slats move to the desired position z.

Radio transmitter

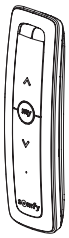

Hand-held radio transmitter Situo 1 io II

to manually activate one or more io-products (io-drives or io-radio receivers) at the same time, 1-channel hand-held radio transmitter, unidirectional, pure, iron, natural or arctic

05140101

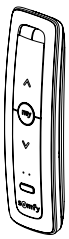

Hand-held radio transmitter Situo 1 A/M io II

to manually activate one or more io-products (io-drives or io-radio receivers) at the same time, switching on/off the automatic control, 1-channel hand-held radio transmitter, unidirectional, pure

05140127_PURE

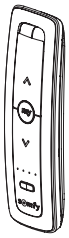

Hand-held radio transmitter Situo 5 io II

to manually activate up to 5 io-products (io-drives or io-radio receivers) at the same time or individually, 5-channel hand-held radio transmitter, unidirectional, pure, iron, natural or arctic

05140102



Hand-held radio transmitter Situo 1 Variation io II

to manually activate one or more io-products (io-drives or io-radio receivers) at the same time, 1-channel hand-held radio transmitter, with scroll wheel, unidirectional, pure or iron

05140103



Hand-held radio transmitter Situo 5 Variation A/M io II

to manually activate up to 5 io-products (io-drives or io-radio receivers) at the same time or individually, 5-channel hand-held radio transmitter, with scroll wheel, switching on and off of the automatic control for all channels, unidirectional, pure or iron

05140104



Situo 5 Bi-radio io/RTS hand-held transmitter

Situo 5 Bi-radio io/RTS hybrid hand-held transmitter connects RTS systems from Somfy with the current standard io-homecontrol, pure

05140010

Note:
For further color options see price list “Control devices”.

Radio system io – Somfy

Radio transmitter



Ysia 16 Patio io hand-held radio transmitter

for the manual control of up to 16 io products (io drives or io wireless receivers) simultaneously or individually, 16-channel hand-held radio transmitter , with scroll wheel, Automatic mode on/off for all channels, two-way, anthracite

05140133

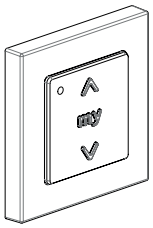

Smoove 1 Mode IN io II wall-mounted transmitter

for manual control of one or more io products (io drives or io radio receivers) at the same time, with frame, unidirectional, pure

05140062

Accessories

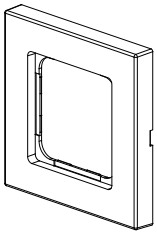

Frame for switch programme Smoove

suitable for all Smoove products, pure

05140057

Sensors

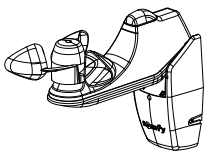

Soliris io 230 V wireless wind and sun sensor, rain option

automatic (wind dependent, brightness dependent and, optionally, rain dependent) wireless control of one or more io drives and io receivers (rain detection only in combination with Ondeis), 230 V AC, grey

Width x height: Dimension 236 x 160 mm

Not currently compatible with Sunea 40 Solar io solar plug-in drive.

05200113

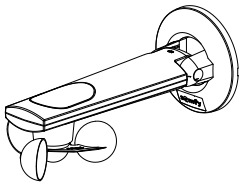

Radio-controlled wind sensor Eolis WireFree io

automatic (wind dependent) control of one drive or multiple drives via radio, battery-powered

Width x height: Dimension 216x95 mm

05200030

Note:

For further color options see price list “Control devices”.

Sensors

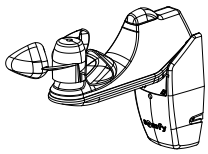

Radio-controlled wind sensor Eolis io 230V, rain option

automatic (wind dependent and optionally rain dependent) control of one or more io-drives and io-receivers per radio, rain sensor only in combination with Ondeis 230 V AC, grey

Width x height: Dimension 236x160 mm

05200009

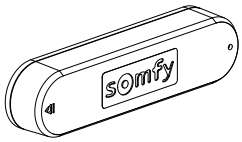

Radio-controlled wind sensor Eolis 3D WireFree io

Radio sensor for wind, for front rail of the awning, battery-powered, traffic white, black or bronzal ultra light

Length x width x height: Dimension 153x38x25 mm

05200033

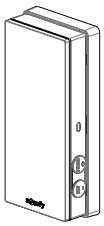

Sunteis solar-operated wireless sensor for sun and outside temperature

automatic (brightness dependent) wireless control of one or more drives, solar-operated

Note:
Automatic mode can be switched on and off using the A/M slide switch on the hand-held radio or wall-mounted radio transmitter .
Temperature control can only be realised in combination with Tahoma Switch!

Length x width x height: Dimension 78 x 78 x 37 mm

05200096

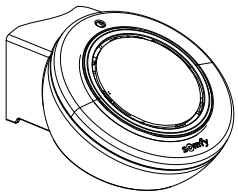

Precipitation sensor Ondeis 24 V DC

to measure the amount of rainfall and snow, integrated self-regulating heating, for pergola VENTUR only

Length x width x height: Dimension 115x100x85 mm

05250231

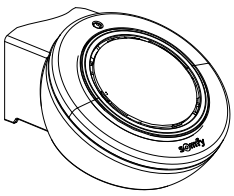

Precipitation sensor Ondeis 230 V AC

Sensor for precipitation, can be used in combination with Eolis io 230 V, Soliris io 230 V, and Soliris Smoove

Length x width x height: Dimension 115x100x85 mm

05200035

Note:
For further color options see price list “Control devices”.

Radio system io – Somfy

Receiver

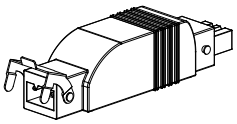

Radio receiver Awning Slim Receiver io

io radio receiver/transmitter (as adapter plug) for the io-activation of a drive, black

Length x width x height: Dimension 115x32x33 mm

05140033

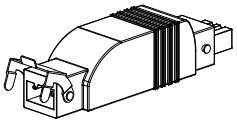

Radio receiver Pergola Slim Receiver io

io radio receiver/transmitter (as adapter plug) for the io-activation of a drive, black

Length x width x height: Dimension 115x32x33 mm

05140032

Central controls

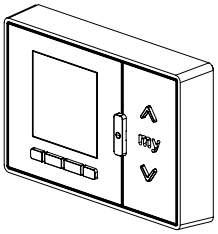

Radio-controlled timer switch Chronis io

Automatic (time dependent) and manual control of multiple io radio drives/io radio receivers in one channel with up to 4 time commands per day

05200090

Note:

For further color options see price list “Control devices”.

Wired control components – Somfy

Switch

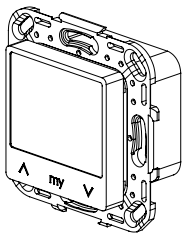

Programme time switch Chronis Smoove Uno S Pure with brightness control

Programme time switch with sun and automatic twilight function, automatic and manual control of one drive, without frame, pure

Not currently compatible with Sunteis Solar io wireless sun sensor.

05200098_PURE

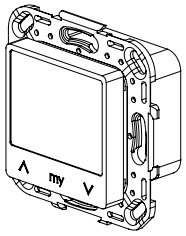

Chronis Smoove Uno IB+ programme timer switch with brightness control

Programme time switch with sun and automatic twilight function, automatic and manual control of several drives, a Smoove Uno IB+ single drive control device is additionally required per drive, without frame, pure

Not currently compatible with Sunteis Solar io wireless sun sensor.

05200099_PURE

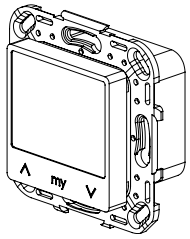

Programme timer Soliris Smoove Uno

Programme time switch with wind/sun and rain automatic, automatic and manual control of one drive, without frame, pure

Compatible with wind/sun sensor Soliris and rain sensor Ondeis.

05200101_PURE

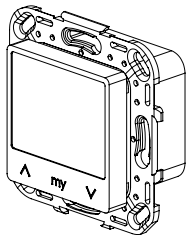

Programme timer Soliris Smoove IB+

Programme time switch with wind, sun and rain automatic, automatic and manual control of several drives, a Smoove Uno IB+ single drive control device is additionally required per drive, without frame, pure

Compatible with wind/sun sensor Soliris and rain sensor Ondeis.

05200103_PURE

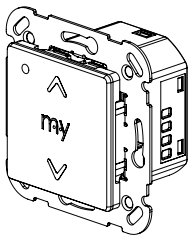

Single drive control device Smoove Uno IB+ without frame

for manual control of a 230V drive for roller shutters, textile shading systems and Venetian blinds, without frame

05140083_PURE Pure

Note:

For further color options see price list “Control devices”.

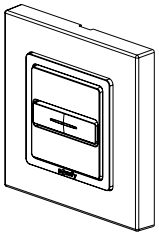

Switch Smoove Uno with frame

Switch Smoove Uno, for the direct activation of a motor, with frame, white

05120020

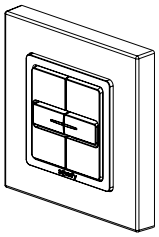

Switch Smoove Duo with frame

Switch Smoove Duo, for the direct activation of two motors, with frame, white

05120021

Sensors

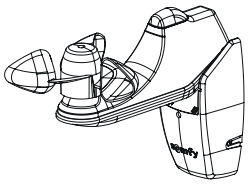

Wind/sun sensor Soliris

Wind/sun sensor for Soliris Smoove Uno Pure and Soliris Smoove IB+, without cable, pure

Width x height: Dimension 236x160 mm

EL040603

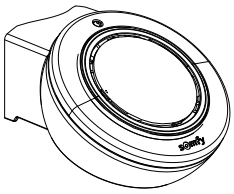

Precipitation sensor Ondeis 230 V AC

Sensor for precipitation, can be used in combination with Eolis io 230 V, Soliris io 230 V, and Soliris Smoove

Length x width x height: Dimension 115x100x85 mm

05200035

Awnings

Awnings with HELLA ONYX Smart Home

The ONYX.HOME control system was specially developed for the operation of sun protection products. Awnings can conveniently be operated via smart phone, table, hand-held radio transmitter or automation.

LED lighting

The awning additionally can be provided with an integrated LED lighting. The LED lighting can be conveniently be operated via the free ONYX app (Smart Home with ONYX.CENTER) or via a hand-held radio transmitter (stand alone mode).

Wind sensor

If the wind sensor detects that the wind threshold value is exceeded, the awnings are retracted for safety reasons. The settings via the ONYX app can be done by the client himself at any time. The 3D radio sensor is battery-operated and is mounted in the drop profile of the awning.

Sun sensor

All shading units can be controlled automatically, individually and brightness dependent via the sun sensor. The settings via the ONYX app can be done by the client himself at any time.

Precipitation sensor

If the suitable sensor technology is used, the awning can be additionally provided with a rain sensor (Art. no. 05200114). In this case the curtain is retracted for safety reasons. The threshold values and the actions to be taken when rain is detected, can be set individually for each shading element via ONYX.

It is a great advantage of HELLA ONYX, that all threshold values of the sensors can be individually set for each shading element. Extensions, such as a second awning, can be connected with the existing sensors as well.

The operation is done via the hand-held radio transmitter ONYX.CLICK in the “stand alone mode”, or via the Smart Home Control with the gateway ONYX.CENTER. Only if ONYX.CENTER is used, all shading elements can be controlled via the free ONYX app.

Stand alone operation

- easy configuration
- Feedback (bidirectional) via hand-held radio transmitter
- Automatic functions individually adjustable for each shading element (wind/sun/rain)
- No additional sensors are required for the extension (additional units).
- Automatic sun control on/off via button combination on the hand-held or wall-mounted radio transmitter

Smart Home operation

- easy configuration
- Live feedback on position and movement of the shading element via the app
- Automatic functions individually adjustable for each shading element (wind/sun/rain/time)
- No additional sensors are required for the extension (additional units).
- Access via the smart phone app
- Security through transparent access control
- Support for Alexa voice control from Amazon, and compatible with Google Assistant and IFTTT
- Updateable (updates several times a year with new functions)
- Routing capability (radio commands are transmitted by the individual devices to increase the range)

SINTESI

Pergola PLUS with HELLA ONYX Smart Home

The ONYX.HOME control system was specially developed for the operation of sun protection products. Pergolas can conveniently be operated via smart phone, table, hand-held radio transmitter or automation.

In the basic version, all PLUS design options are provided with a frost detection and a wind and sun sensor. And all that without surcharge!

Frost detection

Via the integrated frost detection in the Pergola PLUS package, the shading elements are moved to a safe position, if the temperature falls below the temperature set by the client. Herewith damage to the product caused by freezing is avoided. A temperature can be set via the ONYX app, so that the pergola and the lateral shading elements are protected. In case of the VENTUR, the slats tilt to an opening angle of approx. 10°. Thus only an opening angle between 10° and 120° is possible for a manual operation. The curtains of the SINTESI and the lateral shading elements are retracted completely. The settings via the ONYX app can be done by the client himself at any time.

Wind sensor

Via the integrated wind sensor in the Pergola PLUS package, the client can decide, if the slat roof of the pergola VENTUR shall either be closed or remain open, if a set wind speed is exceeded. All other shading units are retracted for safety reasons, if the wind threshold value is exceeded. The settings via the ONYX app can be done by the client himself at any time.

Sun sensor

All shading units can be controlled automatically, individually and brightness dependent via the integrated sun sensor in the Pergola PLUS package. The settings via the ONYX app can be done by the client himself at any time.

It is a great advantage of Pergola PLUS with HELLA ONYX, that all threshold values of the sensors (wind threshold value, temperature threshold value, ...) can be individually set for each shading element. Extensions, such as a lateral shading elements or a second pergola, can be connected with the existing sensors as well.

The operation is done via the hand-held radio transmitter ONYX.CLICK in the “stand alone mode”, or via the Smart Home Control with the gateway ONYX.CENTER. Only if ONYX.CENTER is used, all shading elements can be controlled via the free ONYX app

Pergola PLUS Stand Alone

- easy configuration
- Feedback (bidirectional) via hand-held radio transmitter
- Temperature, wind and brightness sensors are already included in the basic package
- Automatic functions individually adjustable for each shading element (wind/sun/rain)
- No additional sensors are required for an extension with lateral shading elements.
- Automatic sun control on/off via button combination on the hand-held or wall-mounted radio transmitter

Pergola PLUS Smart Home

- easy configuration
- Live feedback on position and movement of the shading element via the app
- Temperature, wind and brightness sensors are already included in the basic package
- Automatic functions individually adjustable for each shading element (wind/sun/rain/time)
- No additional sensors are required for an extension with lateral shading elements from the SIDE product line
- Access via the smart phone app
- Security through transparent access control
- Support for Alexa voice control from Amazon, and compatible with Google Assistant and IFTTT
- Updateable (updates several times a year with new functions)
- Routing capability (radio commands are transmitted by the individual devices to increase the range)

SINTESI

Pergola PLUS extension possibilities

The basic package of the Pergola PLUS (frost, wind and brightness sensors already included) can be extended as follows:

LED lighting

The Pergola PLUS additionally can be provided with an integrated LED lighting. The LED lighting can be conveniently be operated via the free ONYX app (Smart Home with ONYX.CENTER) or via a hand-held radio transmitter (stand alone mode).

Precipitation sensor

If the suitable sensor technology is used, the Pergola PLUS can additionally be provided with a rain and snow sensor (Art.-No. 05200114). The threshold values and the actions to be taken when rain or snow are detected, can be set individually for each shading element via ONYX. Here too a temperature can be set via the ONYX app, from which on, in combination with the rain sensor, snow shall be detected. When snow is detected, the roof of the VENTUR opens to an opening angle of 90°to avoid damage. With all other units, the curtain is retracted for safety reasons. The settings via the ONYX app can be done by the client himself at any time.

Water drainage after rain

With Pergola PLUS, it is possible to conveniently activate or deactivate the “Water drainage after rain” comfort function via the free ONYX App.
With this function, the slats turn automatically after rainfall in the 45° opened position and remain there for a few minutes to ensure that rainwater drains safely from the slats.
This function can be triggered by a previous manual control command or an automatic program.
After the waiting time has elapsed, all automatic programmes are active again and a manual control command is also possible again.
The safety functions for snow, wind and frost have priority over the comfort function “Water drainage after rain”, which means that the safety functions have priority.

Lateral shading elements

Pergola PLUS can be extended with up to 4 lateral shading elements. These can be conveniently be operated via the free ONYX app (Smart Home with ONYX.CENTER) or via a hand-held radio transmitter (stand alone mode). All functions of the already existing sensors can be used for the lateral shading elements as well.

Pergola PLUS with HELLA ONYX Smart Home

A Pergola PLUS with ONYX already has the following sensors included in the basic package:

- Frost monitor
- Sun monitor
- Wind sensor

If you add a precipitation sensor to the pergola, the following functions are also available:

- Rain warning device
- Snow monitor

Adjusting the sensor thresholds

It may be necessary to adjust the threshold values of the sensors. For example, if the basic setting for frost of +5 °C seems too high.

Note:
This feature is available in the stand-alone variant. You do not need an ONYX.CENTER gateway for this.

You can set the values for snow, frost, wind, sun and rain in the following way:

1. Connect to the ONYX.CLICK hand-held radio transmitter via your smartphone.
2. Tap on the pencil at the top right of the respective product for which you want to change a value.
3. Tap on “advanced settings”.
4. The settings may only be made by persons who have the necessary expertise about such an installation, as incorrectly set values can result in damage to the product or harm to persons. Therefore, only confirm the warning message if you have this knowledge.
5. Scroll all the way down
6. Tap on one of the categories for which you want to change the values:
   a. Snow monitor
   b. Frost monitor
   c. Wind sensor
   d. Sun monitor
   e. Rain warning device
7. Set the desired value
8. Tap "Done" or "Save" to save the settings

Note:
The threshold values for the sensors can be set individually for each product (e.g. slatted roof or SIDE system). Therefore, you will not find these settings in the app with the sensor, but directly with the sun shading product.

SINTESI

Priority of the sensors

The following table shows how a pergola behaves when a sensor threshold value is exceeded or undershot. You can also see the basic settings of the values in this table.

SINTESI PLUS/TERRA SIDE

Priority	Event	Behaviour	Factory setting	Settings	Sensors	Delay times
1	snow	go to snow protection position	100% opened (snow detection = below 5°C and rain)	Temperature setting via the ONYX app from 0°C to 10°C Can be deactivated via the ONYX app	Combination ONYX precipitation sensor and ONYX.WEATHER	After snow: The system remains locked for automatic and manual drive commands until the lock is released via the app. Stand-alone (without ONYX.CENTER) can also be operated without unlocking in the app after lock.
2	frost	Go to the frost protection position	100% open when position falls below 5°C	Temperature setting via the ONYX app from 0°C to 10°C Can be deactivated via the ONYX app	ONYX.WEATHER	After frost: Automatic comfort commands and manual control commands are disabled for 15 minutes
3	Wind	Go to the windshield position	100% closed or 100% open	Position 100% open or 100% closed adjustable via the ONYX app Wind threshold adjustable via the ONYX app Can be deactivated via the ONYX app	ONYX.WEATHER	After wind: Automatic comfort commands and manual control commands are disabled for 15 minutes
4	Rain	go to rain protection position	100% closed or 100% open	Position 100% open or 100% closed adjustable via the ONYX app When using an ONYX.CENTER centre box, intermediate positions can also be used Can be deactivated via the ONYX app	ONYX precipitation sensor	After rain: Automatic comfort commands and manual control commands are permitted.
5	Sun	Go to sun protection position	desired position	Position freely selectable via the ONYX app Sun threshold value adjustable via the ONYX app When using an ONYX.CENTER centre box, intermediate positions can also be used Can be deactivated via the ONYX app	ONYX.WEATHER	Sun: Automatic comfort commands and manual control commands are permitted.

VENTUR ONE

Comparison of HELLA ONYX and Somfy io wireless systems

	Radio system HELLA ONYX SMART HOME	Radio system io – Somfy
Scope of functions	▪ Sensitive obstacle detection ▪ All settings using the ONYX app ▪ RGBW combined selectable in the ONYX app ▪ Remote maintenance access via ONYX cloud as standard feature ▪ Smart home connection as standard feature	▪ No sensitive obstacle detection ▪ Settings using Ysia hand-held transmitter (included in scope of supply) ▪ RGB and W separate on two channels
Automatic functions	▪ Automatic wind function ▪ Automatic sun function ▪ Automatic temperature function ▪ Automatic precipitation function ▪ Automatic frost function (2 modes) ▪ Automatic snow function (2 modes) ▪ Automatic timer function	▪ Automatic wind function ▪ Automatic sun function ▪ Automatic precipitation function ▪ Automatic frost function ▪ Automatic snow function
Automatic frost function	2 frost protection modes: ▪ Mode 1: The unit remains operable, but the radius of movement is limited and the roof cannot be closed completely to prevent it freezing in place. ▪ Mode 2: The units closes and cannot be operated again until it has been unlocked in the ONYX app.	▪ The unit remains operable, but the radius of movement is limited and the roof cannot be closed completely to prevent it freezing in place.
Automatic snow function	2 snow protection modes: ▪ Mode 1: The roof opens to 90° so that the snow falls through and the structure cannot be damaged by the weight of snow. ▪ Mode 2: The roof closes completely and locks itself so that it cannot be opened unintentionally while loaded with snow. The locking mechanism can be released using the ONYX app.	▪ The roof opens to 90° so that the snow falls through and the structure cannot be damaged by the weight of snow.
Smart home connections	Supported integration platforms: ▪ Amazon Alexa ▪ Google Home ▪ IFTTT ▪ KNX (new) ▪ Loxone (new) ▪ ONYX API for custom proprietary integrations	Supported integration platforms: ▪ none

EVERYTHING FROM A SINGLE SOURCE

Thanks to its innovative strength, HELLA is a full service provider and offers a broad portfolio of customised sun protection solutions. Premium quality is the benchmark here. Be it refitting, refurbishment or new construction – HELLA has the right solution for every building project!

Terrace & Garden



Window & Façade



Build & Renovate



Control devices



HELLA

Technology 2026 | Terrace & Garden
7540 0043_EN
Subject to technical changes, errors, typesetting and printing errors.